ROOF REPLACEMENT SPECIFICATIONS

For

CITY HALL
215 WEST MAIN STREET
NORTHVILLE, MICHIGAN

Prepared for

CITY OF NORTHVILLE
215 West Main Street
Northville, Michigan 48167

RTA Project No. 23-065
February 12, 2024

SECTION 00 0110
TABLE OF CONTENTS

PROCUREMENT AND CONTRACTING REQUIREMENTS

1.01 DIVISION 00 -- PROCUREMENT AND CONTRACTING REQUIREMENTS

A. 00 0110 - Table of Contents
B. 00 1114 - Bid Solicitation
C. 00 2113 - Instructions to Bidders
D. 00 4100 - Bid Form
E. 00 5000 - Contracting Forms and Supplements

SPECIFICATIONS

2.01 DIVISION 01 -- GENERAL REQUIREMENTS

A. 01 1000 - Summary
B. 01 2000 - Price and Payment Procedures
C. 01 2200 - Unit Prices
D. 01 2300 - Alternates
E. 01 5000 - Temporary Facilities and Controls
F. 01 7100 - Cleaning

2.02 DIVISION 07 -- THERMAL AND MOISTURE PROTECTION

A. 07 3113 - Asphalt Shingles
B. 07 5300 - Elastomeric Membrane Roofing
C. 07 6200 - Sheet Metal Flashing and Trim

END OF SECTION

SECTION 00 1114
BID SOLICITATION

PART 1 GENERAL

1.01 POTENTIAL BIDDER:

A. The Owner will receive sealed bids for the Roof Replacement of the designated building at:
Northville City Hall
215 West Main Street
Northville, Michigan

1.02 BID PROPOSALS:

A. Bid Proposals will be received until the time and the place, as follows, at which time the Bid Proposals will be publicly opened and read aloud.
1. When: Tuesday, February 27, 2024 at 3:00 p.m.
2. Place: Northville City Hall
3. 215 West Main Street
4. Northville, MI 48167
5. Attention: Wendy Wilmers Longpre
6. Office: 248 305-2710

B. Bid proposals shall be submitted on forms furnished within the specifications and may either be mailed or hand delivered to the Owner's Representative as identified in the Instructions to Bidders. Electronic submissions of Bid proposals will not be accepted or opened.

C. The Owner reserves the right to reject any or all Bid Proposals, either in whole or in part, to waive any informalities and in general make awards in any manner deemed to be in the best interest of the Owner.

1.03 SCOPE OF WORK:

A. Roof replacement of the designated roof areas; project size to be determined by the bidder. Contact Alex Wisney of RTA for more information at 734-591-4444.
1. Steep-slope roof system type: Fiber glass reinforced, laminated, asphalt shingles.
2. Low-slope roof system type: Fully adhered, 60 mil reinforced EPDM single-ply roof membrane.
3. Attic work including ventilation and other improvements.

1.04 CONTRACTOR ORIENTATION MEETING:

A. A pre-bid meeting will be held on Friday, February 16, 2024 at 10:00 a.m. at the project site with the Roof Consultant and the Owner to review the scope of work and project conditions. It is **mandatory** that a bidder representative attend this meeting.

1.05 BIDDING DOCUMENTS:

A. Bidding documents will be available after Monday, February 12, 2024for examination and distribution from the office of Roofing Technology Associates, Ltd., 38031 Schoolcraft Road, Livonia, Michigan, 48150. There is no fee associated with obtaining the bidding documents. Email distribution is preferred; however, bidders may pick up the bidding documents at our office. Please call ahead of time if you plan to pick up the bidding documents. For email distribution, contact Alex Wisney at awisney@rtaltd.com.

B. Bidding documents may also be downloaded from BidNet: part of the Michigan Intergovernmental Trade Network (MITN) purchasing group, www.bidnetdirect.com/mitn.

1.06 PROPOSAL WITHDRAWAL:

A. Withdrawal of any proposal is prohibited for a period of sixty (60) days after the time set for opening of proposals.

1.07 SCHEDULE:

A. The roofing work is to be started and completed as negotiated with the Owner. No shingle work between November 15th and March 15th. Bidder is to indicate start date and completion date in the space provided on the Bid Form.

PART 2 NOT USED

PART 3 NOT USED

END OF SECTION

SECTION 00 2113
INSTRUCTIONS TO BIDDERS

PART 1 GENERAL

1.01 THE PROJECT

A. In accordance with these instructions, the Bidder is invited to submit a Bid for project and contract work indicated in the Roof Replacement Specifications.

B. Each Bidder is referred to the Bid Solicitation for this project, which includes instructions and requirements for Bidders in addition to those included in this section.

1.02 CONTRACT

A. The Owner will enter into a single lump sum contract with the selected Bidder.

1.03 SUBMISSION OF BIDS

A. Address for Receiving Bids
   1. Bids for performing the work pertaining to this project will be received by the Owner's Representative via mail or hand delivery only. Submit bids to the attention of Ms. Wendy Wilmers Longpre, Northville City Hall, 215 W. Main Street, Northville, MI 48167.
   2. The Bid Form and any other documents required to be submitted with the Bid Form shall be delivered in a sealed envelope labeled “Sealed Bid” and marked with the project name and bidder identification.

B. Date for Receiving Bids
   1. Bids shall be received on time at the designated location on or before the date and time of receipt of Bids indicated in the Bid Solicitation, unless extension is made by Addendum. Bids received after time and date for receipt of Bids will remain unopened.
   2. Bidders shall assume full responsibility for timely delivery at the address designated for receipt of Bids.
   3. Oral, telephone, facsimile or email Bids are invalid and will not receive consideration.

1.04 BIDDERS REPRESENTATIONS

A. Each Bidder by making his Bid represents that:
   1. He has read, understands, and makes his Bid in accordance with the Bidding Documents.

B. He has visited the site, has familiarized himself with the local conditions under which the Work is to be performed and has correlated his observations with the requirements of the Bidding Documents.

C. His Bid is based upon the materials, systems, and equipment required by the Bidding Documents without exception.

1.05 INSPECTION OF SITE

A. Before submitting his Bid, each Bidder shall personally inspect the site of the proposed work to arrive at a clear understanding of the conditions under which the work is to be done.

B. Each Bidder shall be held to have compared the premises and the site with the Drawings and Specifications, and to have satisfied himself as to the conditions of the premises, the existing obstructions, and any other conditions affecting the completion of his work, all before the delivery of his proposal.

C. No allowances or extra considerations on behalf of any Bidder will be permitted subsequently by reason or error or oversight on the part of the Contractor, or on account of interferences by the activities of the Owner.

1.06 BIDDING DOCUMENTS

A. Bidding Documents which will be issued for the use of Bidders and upon which all proposals are to be based, consist of those listed in these specifications.
   1. Documents consist of: Plans and specifications prepared by Roofing Technology Associates, Ltd.

B. In the event that additional documents are required to explain revisions which are made during the bidding period or to give additional information to the Bidders, the Roof Consultant will prepare such documents in the form of an Addendum with accompanying drawings, if required, and will send copies of the same to all Bidders, prior to the date for receipt of proposals. All proposals are to include the work described and indicated on such additional documents.

C. Interpretation or Correction of Bidding Documents
   1. Bidders shall promptly notify the Roof Consultant of any ambiguity, inconsistency or error which they may discover upon examination of the bidding documents or of the site and local conditions of the work.
   2. Any interpretation, correction or change of the documents will be made by the Roof Consultant by Addendum. Interpretations, corrections or changes of the bidding documents made in any other manner will not be binding and bidders shall not rely upon such interpretations, corrections and changes.
   3. All questions or inquiry relative to this project shall be directed to: Ron Kinne, Project Manager, Roofing Technology Associates, Ltd. at (734)-591-4444 or rkinne@rtaltd.com.

1.07 BIDDER'S OPTIONS

A. For products specified only by reference standard, select product meeting that standard by any manufacturer.

B. For products specified by naming several products or manufacturers, select any one of the products and manufacturers named which comply with the technical specifications.

C. For products specified by naming several products or manufacturers and stating "or approved equal" or similar wording, submit a request for approval for review and approval by the Roof Consultant.

D. For products specified by naming only product and manufacturer, there is no option and no substitutions will be allowed.

1.08 SUBSTITUTIONS

A. Base Bid shall be in accordance with these Bidding Documents.

B. No substitution of products or roofing systems will be allowed on this project, unless a product or roofing system specified is no longer manufactured.

C. In the event that a product or roofing system is no longer manufactured, contact the Roof Consultant. An Addendum will be issued with additional documents for acceptable alternate products or roofing systems.

1.09 BIDDING PROCEDURES

A. Form of Bids
   1. Bid forms are furnished within the Project Specifications. Each Bidder shall submit his bid and retain one copy for his files.
   2. Bids must be filled out fully and correctly and submitted only on Bid Forms provided. Bids in any other form will be rejected.
   3. All information required to be provided on the Bid Form shall be typewritten or printed manually in ink with a handwritten signature where noted.

B. Bid Security
   1. Each Bid proposal shall be accompanied by a certified check, cashier's check or bid bond on an open, solvent Michigan bank in the amount of five percent (5%) of the base bid, payable to the City of Northville as a guarantee of good faith. If the successful bidder fails to furnish satisfactory bonds and insurances within ten (10) days after notice of award, such guarantee shall be forfeited to the City as liquidated damages. The guarantees of the <u>three lowest</u> bidders will be retained until the bonds and insurance of the Contractor have been approved by the City. The bid guarantees of all other bidders will be returned within ten days after the bid opening.

C. Modification or Withdrawal of Bid

1. A Bid may not be modified, withdrawn or canceled by the Bidder during the stipulated time period following the date and time designated for the receipt of Bids, and Bidder so agrees in submitting his bid.
2. Bidder may withdraw his proposal at any time prior to the time set for opening of proposals.

1.10 CONSIDERATION OF BIDS

A. Opening of Bids
   1. The properly identified bids received on time will be opened and read in public as stated in the Bid Solicitation.

B. Acceptance of Bid (Award)
   1. The Owner reserves the right to accept or reject any total bid, or part thereof, and to award the total contract or part thereof to other than the low bidder. All decisions regarding contract awards will be final.
   2. The Owner shall have the right to accept Alternates in any order or combination, and to determine the Low Bidder on the basis of the sum of the Base Bid and the Alternates accepted.

C. Notice of Award
   1. The Contract shall be deemed as having been awarded when formal notice of acceptance of his Proposal has been duly served upon the intended awardee by an officer or agent of the Owner duly authorized to give such notice. The Contract Date shall be the date of this Notice of Award.
   2. The Bidder to whom the Contract is awarded by the Owner shall, within seven (7) days after Notice of Award and/or receipt of Agreement forms from the Owner, sign and deliver to the Owner all required copies.

D. Time of Starting and Completion
   1. The time of starting and completion shall be negotiated with the Owner.
   2. The successful Bidder shall furnish insurance and commence active work on the Project within ten (10) days after receipt of notice of award and shall complete the work within the time negotiated with the Owner.

E. Work Week
   1. The Bidder, if awarded a Contract, shall be required to establish the work week and hours of work as required to properly man the project, maintain the progress schedule and complete the work within the time stated in the Contract. The Contractor shall provide and pay for any overtime necessary to complete his work within the agreed time, with no change in the Contract Sum or additional costs to the Owner.

1.11 PERFORMANCE BOND AND LABOR AND MATERIAL PAYMENT BOND

A. Contractor shall furnish in acceptable form, surety bonds in the amount of 100% of the contract sum as security for the faithful performance of this Contract (Performance Bond) and for the payment of all persons performing labor and furnishing materials in connections with this Contract (Labor and Material Bond). The Contractor shall also furnish in acceptable form, a surety bond in the amount of 50% of the contract sum as security for the faithful correction of all defective work for a period of one year after final acceptance of this Contract (Maintenance and Guarantee Bond). The cost of the aforesaid bonds shall be paid by the Contractor.

1.12 FORM OF CONTRACT BETWEEN OWNER AND CONTRACTOR

A. A Contract for the Work will be written on the AIA Document A104, Standard Abbreviated Form of Agreement Between Owner and Contractor where the basis of payment is a stipulated sum.

1.13 PERMITS

A. Accepted Bidder will be required to obtain applicable building permits for the work of this project. The cost of the permit will be waived and should not be included in the Base Bid.

PART 2 NOT USED

PART 3 NOT USED

END OF SECTION

SECTION 00 4100
BID FORM

PART 1 GENERAL

1.01 TO:

A. Owner
City of Northville
215 West Main Street
Northville, Michigan 48167
Attention: Wendy Wilmers Longpre

1.02 DATE: _____ (BIDDER TO ENTER DATE)

1.03 SUBMITTED BY: (BIDDER TO ENTER NAME AND ADDRESS)

A. Bidder's Full Name _____
Address _____
City, State, Zip_____
Telephone _____
Email _____

1.04 THE UNDERSIGNED IN SUBMITTING THIS PROPOSAL AGREES AS FOLLOWS:

A. The entire work shall subject to the requirements of the General Conditions of the Contract contained in and forming a part of AIA Document A104-2017 Standard Abbreviated Form of Agreement Between Owner and Contractor.

B. Prior to execution of the Agreement for this work, the Contractor shall furnish the Owner with copies of Certificates of Insurance.

1.05 LIABILITY

A. The Contractor shall and does assume liability under the terms of the Workmen's Compensation Law of the State in which the work is being performed.

B. Contractor assumes all liability for injury to persons or damage to, or loss of property of (a) Contractor, his agents or employees, (b) Owner, its agents or employees, or members and (c) any other person, firm or corporation arising in any way directly or indirectly out of the performance of this Contract whether or not such injury, damage, or loss is due to the negligence of the Contractor, its agents or employees. This foregoing assumption of liability by Contractor shall include, without limiting the generality of the foregoing, any injury, damage, or loss arising out of the operation of motor vehicles. This assumption of liability by Contractor shall also include, without limiting the generality of the foregoing, any injury, damage or loss (1) arising out of the negligence of Contractor, (2) arising out of the joint or combined negligence of Contractor and Owner, (3) arising out of the negligence of a third party or parties and Contractor, or (4) without limiting in any way the foregoing, arising in any way, directly or indirectly out of the conduct or occurrence not fully limited to the separate sole negligence of the Owner as proven by Contractor or third party.

C. Should the Owner or an agent or employee of the Owner or members be made a party to any suit or proceeding, even though such suit or proceeding is groundless, false or fraudulent, arising out of injury, damage, or loss for which the Contractor assumes liability under this Contractor, the Contractor will defend such suit or proceeding and shall indemnify and save harmless the Owner, its agents or employees, of and from all liability loss, expenses, judgments (including interest thereon), including Attorney's fees.

D. Since Contractor hereunder shall be an independent Contractor and not agent, servant, or employee of Owner, Contractor assumes full responsibility for compliance with any and all Federal, State, or municipal laws, ordinances, and regulations, including (but not limited to) those having to do with labor, wages and benefits, or taxes and duties collectible from employees under all applicable provisions of the law.

1.06 INSURANCE

A. The Contractor, or any of their subcontractors, shall not commence work under this Contract until they have obtained the insurance required under this section and shall keep such insurance in force during the entire life of this Contract. All coverage shall be with insurance companies licensed and admitted to do business in the State of Michigan and acceptable to the City. The requirements below should not be interpreted to limit the liability of the Contractor. All deductibles and SIR's are the responsibility of the Contractor. The Contractor shall procure and maintain the following insurance coverage:

B. Commercial General Liability insurance for the Project on an "Occurrence Basis" with limits of liability not less than $1,000,000 per occurrence and aggregate. Coverage shall include the following extensions: (A) Contractual Liability; (B) Products and Completed Operations; (C) Independent Contractors Coverage; (D) Broad Form General Liability Extensions or equivalent; (E) Deletion of all Explosion, Collapse, and Underground (XCU) exclusion, if applicable. Coverage limit may be obtained using primary and excess/umbrella following form liability coverage..

C. Automobile Liability Insurance including Michigan No-Fault Coverages, with limits of liability not less than $1,000,000 per occurrence, combined single limit for Bodily Injury, and Property Damage. Coverage shall include all owned vehicles, all non-owned vehicles, and all hired vehicles. c.

D. Workers' Compensation Insurance: Including Employers' Liability Coverage, in accordance with all applicable statues of the State of Michigan .

E. Additional Insured: Commercial General Liability and Automobile Liability, as described above, shall include an endorsement stating that City is named as additional insured. It is understood and agreed by naming City as additional insured, coverage afforded is considered primary and any other insurance the City may have in effect shall be considered secondary and/or excess. .

F. Cancellation Notice: All policies, as described above, shall include an endorsement stating that it is understood and agreed that Advance Written Notice of Cancellation or Non-Renewal shall be sent to the City Thirty (30) days prior to cancellation, Ten (10) days for cancellation due to non-payment of premium.

G. Proof of Insurance Coverage: The Contractor shall provide the City at the time that the contracts are returned for execution, a Certificate of Insurance as well as the required endorsements. In lieu of required endorsements, if applicable, a copy of the policy sections where coverage is provided for additional insured and cancellation notice would be acceptable. If any of the above coverages expire during the term of this Contract, the Contractor shall deliver renewal certificates and endorsements to the City at least Ten (10) days prior to the expiration dates..

1.07 OFFER

A. Having examined the Place of The Work and all matters referred to in the Instructions to Bidders and the Bid Documents prepared by Roofing Technology Associates, Ltd. for the above mentioned project, we, the undersigned, hereby offer to enter into a Contract to perform the Work for the Sum of:

BASE BID - NORTHVILLE CITY HALL

_____Dollars

($_____), in lawful money of the United States of America.

B. All applicable federal taxes are included and State of Michigan taxes are included in the Bid Sum.

C. All building permit fees are included in the Bid Sum.

1.08 ALTERNATES

A. The undersigned agrees that at the Owner's discretion, the Base Bid Sums may be altered as follows if the Alternate Prices indicated and defined in the Alternates Section and elsewhere in

the Bidding Documents need to be executed (Failure to bid upon requested Alternate Prices shall indicate no change in the Base Bid Sum).

1. ALTERNATE NO. 1 - NEW PREFINISHED ALUMINUM 6-INCH K-STYLE GUTTERS
   Add the sum of: _____Dollars ($_____), in lawful money of the United States of America.

1.09 ACCEPTANCE

A. This offer shall be open to acceptance and is irrevocable for sixty days from the bid closing date.

B. If this bid is accepted by Owner within the time period stated above, we will:
   1. Execute the Agreement within seven days of receipt of Notice of Award.

1.10 CONTRACT TIME

A. If this Bid is accepted, we will:
   1. Start the Work by _____ (Bidder to enter start date).
   2. Complete the Work by _____ (Bidder to enter completion date or time frame).
   3. Complete the work within _____ business days from the start date

1.11 UNIT PRICES

A. The undersigned agrees that at the Owner's discretion, the Base Bid Sum may be altered as follows if the Unit Prices indicated and defined in Unit Prices and elsewhere in the Bidding Documents are to be executed. (Failure to bid upon requested Unit Prices shall indicate no change in the Base Bid Sum.)

B. UNIT PRICE NO. 1 - WOOD NAILERS & PLYWOOD
   1. 1" x 4" _____Dollars ($ _____) per lineal foot
   2. 1" x 6" _____Dollars ($ _____) per lineal foot
   3. 1" x 8" _____Dollars ($ _____) per lineal foot
   4. 1" x 10" _____Dollars ($ _____) per lineal foot
   5. 2" x 4" _____Dollars ($ _____) per lineal foot
   6. 2" x 6" _____Dollars ($ _____) per lineal foot
   7. 2" x 8" _____Dollars ($ _____) per lineal foot
   8. 2" x 10" _____Dollars ($ _____) per lineal foot
   9. 1/2-inch CDX Plywood _____Dollars ($_____) per square foot
   10. 3/4-inch CDX Plywood _____Dollars ($ _____) per square foot

C. UNIT PRICE NO. 2 - VINYL SIDING REPLACEMENT
   1. Add the sum of:
   2. (TIME & MATERIAL BASIS OF PAYMENT)
   3. _____Dollars ($ _____) per man hour
   4. _____% material mark up

1.12 ADDENDA

A. The following Addenda have been received. The modifications to the Bid Documents noted below have been considered and all costs are included in the Bid Sum.
   1. Addendum # _____ Dated _____.
   2. Addendum # _____ Dated _____.

1.13 BID FORM SIGNATURE(S)

The Corporate Seal of

_____

(Bidder - print the full name of your firm)

was hereunto affixed in the presence of:

_____

(Authorized signing officer, Title)

(Seal)

_____

(Authorized signing officer, Title)

PART 2 NOT USED

PART 3 NOT USED

END OF SECTION

SECTION 00 5000
CONTRACTING FORMS AND SUPPLEMENTS

PART 1 GENERAL

1.01 AGREEMENT AND CONDITIONS OF THE CONTRACT

A. The Agreement and General Conditions are based on AIA A104.

1.02 FORMS

A. Use the following forms for the specified purposes unless otherwise indicated elsewhere in Contract Documents.

B. Post-Award Certificates and Other Forms:
   1. Schedule of Values Form: AIA G703.
   2. Application for Payment Forms: AIA G702 with AIA G703 (for Contractors).

C. Clarification and Modification Forms:
   1. Change Order Form: AIA G701.

D. Closeout Forms:
   1. Certificate of Substantial Completion Form: AIA G704.

1.03 REFERENCE STANDARDS

A. AIA A104 - Standard Abbreviated Form of Agreement Between Owner and Contractor; 2017.

B. AIA G701 - Change Order; 2017.

C. AIA G702 - Application and Certificate for Payment; 1992.

D. AIA G703 - Continuation Sheet; 1992.

E. AIA G704 - Certificate of Substantial Completion; 2017.

PART 2 NOT USED

PART 3 NOT USED

END OF SECTION

SECTION 01 1000
SUMMARY

PART 1 GENERAL

1.01 REQUIREMENTS

A. This section is a part of the entire set of Contract Documents and shall be coordinated with the applicable provisions of the other parts.

B. All bidders shall be held to have thoroughly examined all of the drawings and specifications and to have visited the site to determine the extent of reroofing and alteration work required. All measurements are the responsibility of the bidder.

C. It is the declared and acknowledged intention and meaning of these specifications to repair, reroof and to alter the existing premises as required to provide a weathertight roofing system.

D. The work will include the furnishing of all materials and equipment and the performing of all labor required, whether or not specifically indicated by the plans and specifications, to provide a weathertight roofing system.

1.02 PROJECT

A. Project Name: Northville City Hall

B. Owner's Name: City of Northville

C. Owner's Representative: Wendy Wilmers Longpre.

D. Roof Consultant's Name: Mr. Alex Wisney of Roofing Technology Associates, Ltd.

E. The Project consists of reroofing the designated building of Northville City Hall in Northville, Michigan.

1.03 CONTRACT DESCRIPTION

A. Contract Type: A single prime contract based on a Stipulated Price as described in the Contract Documents.

1.04 DESCRIPTION OF ALTERATIONS WORK

A. Scope of alterations work is indicated on drawings and described in the individual specification sections.

B. Section 07 3113 - Asphalt Shingles
   1. Demolition and substrate preparation requirements for steep slope roof areas.
   2. Install underlayment and laminated shingles in accordance with the selected shingle manufacturer's specifications.
   3. See alternates for gutter replacement in Section 01 2300 - Alternates.

C. Section 07 5300 - Elastomeric Membrane Roofing
   1. Demolition and substrate preparation requirements for low slope roof areas.
   2. Install wood nailers and plywood as shown in the RTA Details and at locations required in the written specifications.
   3. Install gypsum barrier board.
   4. Fully adhere 60 mil reinforced EPDM membrane and flashing on the low slope roof areas in accordance with the selected membrane manufacturer's specifications.

D. Section 07 6200 - Sheet Metal Flashing and Trim
   1. Install prefinished galvanized drip edge on the perimeter edges.
   2. Install prefinished galvanized counterflashing at walls.
   3. Install new gutters and downspouts on low slope roof areas.

1.05 EXISTING MATERIAL AND EQUIPMENT REMOVED

A. Contractor shall remove all fixed equipment designated to be removed.

B. Items of existing equipment which are to be reused, shall be carefully removed, stored and protected, and later reinstalled in original or new locations as required.

C. Certain materials, particularly specified, shall be reused in the work, such material shall be in good usable condition and shall be cleaned and conditioned as required for reuse.

D. All existing material and equipment which is to remain in place or to be reused and has been damaged or defaced during the progress of the work, shall be restored to a condition equal to that which existed prior to the start of the work, or shall be replaced with new materials and equipment equal in all respects, and finished so as to be uniform in appearance to adjacent existing work.

1.06 SALVAGED MATERIALS

A. Salvaged materials which are not to be reused will, unless otherwise specified, or verbally requested by the Owner, become the property of the Contractor and will be removed from the premises by him and legally disposed of off-site by him.

1.07 EXISTING CONDITIONS

A. The Contractor shall check all dimensions and verify all conditions shown on the drawings at the site in relation to his work.

B. Information as shown on the plans is given solely for the convenience of the Contractor, and use of such dimensions, elevations, sizes or information is made at his own risk.

C. Conditions other than those which are described in these specifications shall be identified in writing to the Roof Consultant before proceeding with the work. The Roof Consultant will provide approved alternate details as required by changed conditions. The Contractor shall be responsible for any unauthorized changes he incorporates in the work.

1.08 OWNER OCCUPANCY

A. Owner intends to continue to occupy adjacent portions of the existing building during the entire construction period.

B. Cooperate with Owner to minimize conflict and to facilitate Owner's operations.

C. Schedule the Work to accommodate Owner occupancy.

1.09 CONTRACTOR USE OF SITE AND PREMISES

A. Construction Operations: Limited to areas designated by the Owner.
   1. Locate and conduct construction activities in ways that will limit disturbance to site.

B. Arrange use of site and premises to allow:
   1. Owner occupancy.

C. Provide access to and from site as required by law and by Owner:
   1. Emergency Building Exits During Construction: Keep all exits required by code open during construction period; provide temporary exit signs if exit routes are temporarily altered.
   2. Do not obstruct roadways, sidewalks, or other public ways without permit.

D. Existing building spaces may not be used for storage.

E. Time Restrictions:
   1. Limit conduct of especially noisy exterior work to the hours allowed by local municipality ordinances.

F. Utility Outages and Shutdown:
   1. Prevent accidental disruption of utility services to other facilities.
   2. Any utility disruptions that may become necessary to perform the work described herein are to be coordinated with the Owner 48 hours in advance.

PART 2 NOT USED

PART 3 NOT USED

END OF SECTION

SECTION 01 2000
PRICE AND PAYMENT PROCEDURES

PART 1 GENERAL

1.01 SECTION INCLUDES

A. Procedures for preparation and submittal of applications for progress payments.

B. Correlation of Contractor submittals based on changes.

C. Procedures for preparation and submittal of application for final payment.

1.02 RELATED REQUIREMENTS

A. Section 00 5000 - Contracting Forms and Supplements: Forms to be used.

B. Section 01 2200 - Unit Prices: Monetary values of unit prices; Payment and modification procedures relating to unit prices.

1.03 SCHEDULE OF VALUES

A. Electronic media printout including equivalent information will be considered in lieu of standard form specified; submit draft to Roof Consultant for approval.

B. Forms filled out by hand will not be accepted.

C. Submit a printed schedule on AIA Form G703 - Continuation Sheet. Contractor's standard form or electronic media printout will not be considered.

D. Submit Schedule of Values in duplicate within 15 days after date of Owner-Contractor Agreement.

E. Revise the schedule to list approved Change Orders, with each Application For Payment.

1.04 APPLICATIONS FOR PROGRESS PAYMENTS

A. Payment Period: Submit at intervals stipulated in the Agreement.

B. Use Form AIA G702 and Form AIA G703, edition stipulated in the Agreement.

C. Electronic media printout including equivalent information will be considered in lieu of standard form specified; submit sample to Roof Consultant for approval.

D. Forms filled out by hand will not be accepted.

E. For each item, provide a column for listing each of the following:
   1. Item Number.
   2. Description of work.
   3. Scheduled Values.
   4. Previous Applications.
   5. Work in Place and Stored Materials under this Application.
   6. Authorized Change Orders.
   7. Total Completed and Stored to Date of Application.
   8. Percentage of Completion.
   9. Balance to Finish.
   10. Retainage.

F. Execute certification by signature of authorized officer.

G. Use data from approved Schedule of Values. Provide dollar value in each column for each line item for portion of work performed and for stored products.

H. Calculate retainage value as follows: ten percent (10%) of the dollar value of the work completed until the Contract is fifty percent (50%) complete. After the Contract is 50% complete, additional retainage shall not be withheld unless the City determines that the Contractor is not making satisfactory progress or for other specific cause related to the Contractor’s performance under this Contract or failure to make reasonable payment to subcontractors and material suppliers.

I. List each authorized Change Order as a separate line item, listing Change Order number and dollar amount as for an original item of work.

J. Submit one electronic and three hard-copies of each Application for Payment.

K. Include the following with the application:
   1. Transmittal letter.
   2. Partial release of liens from major subcontractors and vendors.
   3. Notarized Sworn Statements.

L. When Roof Consultant requires substantiating information, submit data justifying dollar amounts in question. Provide one copy of data with cover letter for each copy of submittal. Show application number and date, and line item by number and description.

M. Submit separate documentation for unit price extras for insulated duct installation and new roof cap flashing installation to the Roof Consultant. Indicate the number of insulated ducts installed and the number of new roof cap flashings installed (where none previously existed) by Building Designation and Mailing Address.

1.05 MODIFICATION PROCEDURES

A. Submit name of the individual authorized to receive change documents and who will be responsible for informing others in Contractor's employ or subcontractors of changes to Contract Documents.

B. For minor changes not involving an adjustment to the Contract Sum or Contract Time, Roof Consultant will issue instructions directly to Contractor.

C. For other required changes, Roof Consultant will issue a document signed by Owner instructing Contractor to proceed with the change, for subsequent inclusion in a Change Order.
   1. The document will describe the required changes and will designate method of determining any change in Contract Sum or Contract Time.
   2. Promptly execute the change.

D. For changes for which advance pricing is desired, Roof Consultant will issue a document that includes a detailed description of a proposed change with supplementary or revised drawings and specifications, a change in Contract Time for executing the change with a stipulation of any overtime work required and the period of time during which the requested price will be considered valid. Contractor shall prepare and submit a fixed price quotation within seven days.

E. Contractor may propose a change by submitting a request for change to Roof Consultant, describing the proposed change and its full effect on the work, with a statement describing the reason for the change, and the effect on the Contract Sum and Contract Time with full documentation.

F. Computation of Change in Contract Amount: As specified in the Agreement and Conditions of the Contract.
   1. For change requested by Roof Consultant for work falling under a fixed price contract, the amount will be based on Contractor's price quotation.
   2. For change requested by Contractor, the amount will be based on the Contractor's request for a Change Order as approved by Roof Consultant.
   3. For pre-determined unit prices and quantities, the amount will be based on the fixed unit prices.
   4. For change ordered by Roof Consultant without a quotation from Contractor, the amount will be determined by Roof Consultant based on the Contractor's substantiation of costs as specified for Time and Material work.

G. Substantiation of Costs: Provide full information required for evaluation.
   1. On request, provide the following data:
      a. Quantities of products, labor, and equipment.
      b. Taxes, insurance, and bonds.
      c. Overhead and profit.

d. Justification for any change in Contract Time.
e. Credit for deletions from Contract, similarly documented.

2. Support each claim for additional costs with additional information:
   a. Origin and date of claim.
   b. Dates and times work was performed, and by whom.
   c. Time records and wage rates paid.
   d. Invoices and receipts for products, equipment, and subcontracts, similarly documented.
3. For Time and Material work, submit itemized account and supporting data after completion of change, within time limits indicated in the Conditions of the Contract.

H. Execution of Change Orders: Roof Consultant will issue Change Orders for signatures of parties as provided in the Conditions of the Contract.

I. After execution of Change Order, promptly revise Schedule of Values and Application for Payment forms to record each authorized Change Order as a separate line item and adjust the Contract Sum.

1.06 APPLICATION FOR FINAL PAYMENT

A. Prepare Application for Final Payment as specified for progress payments, identifying total adjusted Contract Sum, previous payments, and sum remaining due, including all outstanding retainage.

B. Application for Final Payment will not be considered until the following have been accomplished:
   1. All punchlist items have been satisfactorily completed as determined by the Roof Consultant.
   2. Contractor's and Manufacturer's warranties have been issued.

PART 2 NOT USED

PART 3 NOT USED

END OF SECTION

SECTION 01 2200
UNIT PRICES

PART 1 GENERAL

1.01 SECTION INCLUDES

A. List of unit prices, for use in preparing Bids.

B. Measurement and payment criteria applicable to Work performed under a unit price payment method.

C. Defect assessment and non-payment for rejected work.

1.02 COSTS INCLUDED

A. Unit Prices included on the Bid Form shall include full compensation for all required labor, products, tools, equipment, plant, transportation, services and incidentals; erection, application or installation of an item of the Work; overhead and profit.

1.03 UNIT QUANTITIES SPECIFIED

A. Quantities indicated in the Bid Form are for bidding and contract purposes only. Quantities and measurements of actual Work will determine the payment amount.

1.04 MEASUREMENT OF QUANTITIES

A. Take all measurements and compute quantities. Measurements and quantities will be verified by Roof Consultant.

B. Measurement by Area: Measured by square dimension using mean length and width or radius.

C. Linear Measurement: Measured by linear dimension, at the item centerline or mean chord.

D. The Contractor shall record measurement of quantities and track the quantities.

1.05 PAYMENT

A. Payment for Work governed by unit prices will be made on the basis of the actual measurements and quantities of Work that is incorporated in or made necessary by the Work and accepted by the Roof Consultant, multiplied by the unit price.

B. Payment will not be made for any of the following:
   1. Products wasted or disposed of in a manner that is not acceptable.
   2. Products determined as unacceptable before or after placement.
   3. Products remaining on hand after completion of the Work.
   4. Loading, hauling, and disposing of rejected Products.

1.06 DEFECT ASSESSMENT

A. Replace Work, or portions of the Work, not complying with specified requirements.

B. If, in the opinion of Roof Consultant, it is not practical to remove and replace the Work, Roof Consultant will direct one of the following remedies:
   1. The defective Work may remain, but the unit price will be adjusted to a new unit price at the discretion of Roof Consultant.
   2. The defective Work will be partially repaired to the instructions of the Roof Consultant, and the unit price will be adjusted to a new unit price at the discretion of Roof Consultant.

C. The authority of Roof Consultant to assess the defect and identify payment adjustment is final.

1.07 SCHEDULE OF UNIT PRICES

A. Unit Price No. 1 - Wood Nailers and Plywood - Replace, as necessary and designated by the Roof Consultant, deteriorated wood nailers and plywood. Quote a per lineal foot price for dimensional lumber and a per square foot price for plywood on the Bid Form for the following sizes:
   1. 1" x 4"
   2. 1" x 6"

3. 1" x 8"
4. 1" x 10"
5. 2" x 4"
6. 2" x 6"
7. 2" x 8"
8. 2" x 10"
9. 1/2-inch CDX plywood
10. 3/4-inch CDX plywood

B. Unit Price No. 2 - Vinyl Siding Replacement - Install vinyl siding to replace missing, damaged, cracked or deteriorated vinyl siding. The replacement siding shall match the existing siding. The installation shall be in accordance with the Vinyl Siding Institute's installation Manual, www.vinylsiding.org/wp-content/uploads/2020/06/2020-VSI-Installation-Manual.pdf. The price shall be in accordance with a time and material payment basis. The price per man hour shall include hourly rate, benefits, profit and overhead. The price for materials shall include the price of materials installed only, shipping, handling, taxes and profit. Confirmation of all time and material costs shall be provided to the Owner upon request. Quote a hourly labor rate and material cost mark up by percent on the Bid Form.

PART 2 NOT USED

PART 3 NOT USED

END OF SECTION

SECTION 01 2300
ALTERNATES

PART 1 GENERAL

1.01 SECTION INCLUDES

A. Description of Alternates.

B. Procedures for pricing Alternates.

C. Documentation of changes to Contract Price and Contract Time.

1.02 RELATED REQUIREMENTS

A. Document 00 2113 - Instructions to Bidders: Instructions for preparation of pricing for Alternates.

1.03 ACCEPTANCE OF ALTERNATES

A. Alternates quoted on the Bid Form will be reviewed and accepted or rejected at Owner's option. Accepted Alternates will be identified in the Owner-Contractor Agreement.

B. Coordinate related work and modify surrounding work to integrate the Work of each Alternate.

1.04 SCHEDULE OF ALTERNATES

A. Alternate No. 1 - Designated Gutter and Downspout Replacement - Provide the Owner with pricing to install 6-inch K-style gutters and 3x4 corrugated rectangular downspouts to replace existing gutters on steep slope roof areas. Quote a lump sum price for gutter and downspout installation on the Bid Form. NOTE: Downspouts will be installed in same locations as existing downspouts and discharge directly into existing below grade drain pipes where provided.

PART 2 NOT USED

PART 3 NOT USED

END OF SECTION

SECTION 01 5000
TEMPORARY FACILITIES AND CONTROLS

PART 1 GENERAL

1.01 ROADWAYS, DRIVES, PARKING AREAS AND SIDEWALKS

A. The Contractor is responsible for the condition of all existing roadways, sidewalks, etc., used during construction operations and shall repair same as required and leave same in good condition at the completion of the job.

1.02 BARRICADES AND PROTECTION

A. The property on which work is to be done is in use. This means that the Owners, Owner's guests and other trades may be adjacent to and below the construction operations.

B. The Contractor will provide and maintain in good repair all barricades, guard railings and temporary protection as required by law and/or to suit job conditions.

C. The Contractor shall do everything possible to protect the public, the workmen, the premises and adjoining property from injury or damage.

D. Properly protect all sidewalks, pavements, existing building areas, building facades, windows and skylights. Replace or repair all parts of same which become damaged or defaced during or as a result of construction operations. Repairing of damaged parts shall be done in strict accordance with all local codes and ordinances and the Owner as conditions require.

1.03 MIOSHA SAFETY STANDARDS

A. All work must be accomplished in accordance will all applicable Construction Safety Standards rules and regulations for Construction Operations as set forth by the Michigan Department of Labor (MIOSHA).

1.04 VANDALISM

A. The Contractor shall pay for all damage by vandalism to material or equipment that occurs to items finished or installed under this Contract. The Contractor shall be responsible for the work under this Contract during the construction period from the start until the final acceptance of the entire project by the Owner.

1.05 TEMPORARY WEATHER PROTECTION

A. The Contractor shall provide, maintain and pay for all temporary weather protection as required to properly protect all parts of the work from damage. This shall include temporary protective coverings.

1.06 RUBBISH DISPOSAL, FIRE SAFETY

A. During non-construction hours, trash containers shall be covered and sealed to prevent windblown debris and access into trash containers.

B. The location of the trash containers shall be subject to the approval of the Owner.

C. All rubbish and debris shall be removed from the site daily or more often if directed by the Owner. Burning of trash on-site shall not be allowed.

D. No open fire shall be permitted on the building site at any time.

1.07 TEMPORARY SANITARY FACILITIES

A. Provide and maintain required facilities and enclosures. Provide at time of project mobilization.

B. Use of existing facilities is not permitted.

C. Maintain daily in clean and sanitary condition.

1.08 REMOVAL OF TEMPORARY WORK

A. All temporary structures, barricades, protection and similar work shall be removed by the Contractor at completion of the project or when directed. Any repairs or alterations

necessitated by such removal shall be made by the Contractor, and at the Contractor's expense.

1.09 WORK ACTIVITIES

A. Contractors and subcontractors shall direct their employees to conduct themselves so as not to interfere with or disrupt the building activities. The Contractor shall schedule construction operations to minimize interference with operations, and cooperate with Owner in maintaining public access to existing building facilities.

B. All construction operations, delivery and storage of material and movement of equipment shall be governed by applicable local building codes, traffic regulation and safety and fire regulation of local authorities.

C. Contractors, subcontractors, and their employees or suppliers shall not use or interfere with existing public access, drives, roads or parking lot, except as specifically indicated or by prior arrangement with the Owner.

D. Contractor’s employees parking, delivery trucks and other construction vehicle parking shall only be at areas designated by the Owner.

1.10 TEMPORARY SERVICES

A. Temporary power, as required for the project, shall be provided by the Contractor. The generator and all electrical cords must be maintained in areas approved by the Owner.

B. Use the Owner's power only if permission is granted by the Owner.

PART 2 NOT USED

PART 3 NOT USED

END OF SECTION

SECTION 01 7100
CLEANING

PART 1 GENERAL

1.01 SECTION INCLUDES:

A. General Requirements

B. Disposal Requirements

1.02 GENERAL REQUIREMENTS

A. Execute cleaning during progress of the work and at completion of the work.

1.03 DISPOSAL REQUIREMENTS

A. Conduct cleaning and disposal operations to comply with codes, ordinances, regulations and anti-pollution laws.

PART 2 PRODUCTS

2.01 NOT USED

PART 3 EXECUTION

3.01 DURING CONSTRUCTION

A. Execute daily cleaning of the interior and exterior to keep the work, the site and adjacent properties free from accumulations of waste materials, rubbish, fallen debris during reroofing and windblown debris, resulting from construction operations.

B. Daily interior clean-up is required and must be conducted to the satisfaction of the Owner.

C. Provide onsite containers for the collection of waste materials, debris and rubbish. All waste materials must be disposed of daily in onsite containers. Do not use the Owner's or Tenant's onsite containers.

D. Remove waste materials, debris and rubbish from the site periodically and dispose of at legal disposal areas.

FINAL CLEANING

A. Requirements: At the completion of work and immediately prior to final inspection, clean the entire project as follows:

1. Thoroughly clean, sweep and wash all interior and exterior surfaces provided under the Contract. Leave the interior, exterior and rooftop in a complete and finished condition to the satisfaction of the Owner.
2. Direct all subcontractors to similarly perform, at the same time, an equivalent thorough cleaning of all work and equipment provided under their contracts.
3. Remove all temporary structures and all debris, including dirt, sand gravel, rubbish and waste material.
4. Should the Contractor not remove rubbish or debris or not clean the building and site as specified above, the Owner reserves the right to have the cleaning done at the expense of the Contractor.

B. Use only cleaning materials recommended by manufacturer of surface to be cleaned.

C. In preparation for substantial completion of occupancy, conduct final inspection of sight-exposed interior and exterior surfaces, and of concealed spaces.

D. Repair, patch and touch-up marred surfaces to specified finish, to match adjacent surfaces.

E. Vacuum clean all interior spaces to the satisfaction of the Owner.

F. Handle materials in controlled manner with as few handlings as possible. Do not drop or throw materials from heights.

G. Wash and wipe clean all lighting fixtures, lamps and other electrical equipment which may have become soiled during installation.

H. Broom clean exterior paved surfaces; rake clean other surfaces of the grounds.

I. Remove and dispose of all water, dirt, rubbish or any other foreign substances.

FINAL INSPECTION

A. After cleaning is complete, the final inspection may be scheduled. The inspection will be done with the Owner and Roof Consultant.

END OF SECTION

SECTION 07 3113
ASPHALT SHINGLES

PART 1 GENERAL

1.01 SECTION INCLUDES

A. Asphalt shingle roofing.

B. Demolition and substrate preparation.

C. Flexible sheet membranes for eave protection, underlayment, and valley protection.

D. Associated metal flashings and accessories.

1.02 REFERENCE STANDARDS

A. ASTM D226/D226M - Standard Specification for Asphalt-Saturated Organic Felt Used in Roofing and Waterproofing; 2009.

B. ASTM D1970/D1970M - Standard Specification for Self-Adhering Polymer Modified Bituminous Sheet Materials Used as Steep Roofing Underlayment for Ice Dam Protection; 2013.

C. ASTM D4586/D4586M - Standard Specification for Asphalt Roof Cement, Asbestos-Free; 2007 (Reapproved 2012)e1.

D. ASTM D4869/D4869M - Standard Specification for Asphalt-Saturated Organic Felt Underlayment Used in Steep Slope Roofing; 2005 (Reapproved 2011)e1.

E. ASTM E108 - Standard Test Methods for Fire Tests of Roof Coverings; 2011.

F. ASTM D3161-13 - Standard Test Method for Wind-Resistance of Steep Slope Roofing Products; 2013.

G. ASTM D3462 - Standard Specification for Asphalt Shingles Made From Glass Felt and Surfaced With Mineral Granules; 2010a.

H. SMACNA (ASMM) - Architectural Sheet Metal Manual; Sheet Metal and Air Conditioning Contractors' National Association; 2012.

I. NRCA Roofing and Waterproofing Manual - National Roofing Contractor Association, Fifth Edition, 2003 Update.

J. Residential Asphalt Roofing Manual - Asphalt Roofing Manufacturers Association (ARMA), 2014 Edition.

1.03 SUBMITTALS

A. Product Data: Provide data indicating material characteristics, performance criteria, and limitations.

B. Shop Drawings: For metal flashings, indicate specially configured metal flashings, jointing methods and locations, fastening methods and locations, and installation details.

C. Installation Instructions for the selected or approved heat trace cable product from the manufacturer.

D. Manufacturer's Instructions: Indicate installation criteria and procedures.

E. Manufacturer's Certificate: Certify that products meet or exceed specified requirements.

1.04 QUALITY ASSURANCE

A. General

1. The Contractor will be responsible for measurements. Before ordering material, preparing shop drawings, or doing any work, verify at the site all dimensions which may affect the work. The Contractor assumes full responsibility for the accuracy of figures. No allowance for additional compensation will be considered for discrepancies between dimensions on the drawings and actual field dimensions.

2. Immediately refer to any conflicts among requirements of these specifications, on drawings, those of regulatory agencies, material manufacturer's recommendations and good roofing practices to the Owner's Representative.
3. Final results are the entire responsibility of the Contractor.

B. Reference Standards
1. The latest publications of The NRCA Steep Roofing Manual; National Roofing Contractors Association, and SMACNA Architectural Sheet Metal and the Residential Asphalt Roofing Manual published by ARMA as applicable to this project.
2. Provide materials which have been tested, listed and labeled by Underwriters Laboratories (UL).

C. Installer References
1. The Contractor shall be a licensed installer for the specified asphalt shingle manufacturer and have installed shingle roof systems of a similar nature. The Contractor shall have a minimum of 5 years experience and submit references from past jobs. Failure to meet these criteria will be basis for rejection of the bid.
2. The Contractor shall provide names and phone numbers of key individuals in the firm that can be reached 24 hours a day. Telephone numbers to an answering service or telephone answering machine will not be considered acceptable.
3. Submit a list of at least 3 completed projects similar in scope to the project building along with the Bid Form. Include contact names and phone numbers.

D. Installation Standards
1. Accomplish work under this Section in strict accordance with the shingle manufacturer's published specifications and best trade practices to achieve a completely weathertight roofing and flashing installation.

E. Materials
1. All materials to be installed must come from a single asphalt shingle manufacturer as reasonably possible; including, but not limited to asphalt shingles, felt underlayment, eaves flashing and hip and ridge cap shingles. Mixing and matching of materials is unacceptable. Generic or materials without manufacturer's wrappers will not be acceptable.

1.05 FIELD CONDITIONS

A. Do not install asphalt shingles or eave protection membrane when surface temperatures are below 45 degrees F (7 degrees C).

B. Weather Conditions Limitations: Proceed with roofing work only when existing and forecasted weather conditions will permit work to be performed in accordance with manufacturer's recommendations and warranty requirements.
1. Do not remove or install materials when rain, moisture, frost, snow or other inclement climatic conditions are occurring.

1.06 PRODUCT HANDLING

A. Store and handle roofing materials in a manner which will prevent moisture intrusion. Store in a dry, well ventilated, weather tight place. Unless protected from weather or other moisture sources, do not leave unused felts on the roof overnight or when roofing work is not in progress. Store rolls of felt and other sheet materials on end on pallets or other raised surface and completely cover with tarps. Handle and store materials and equipment in a manner to avoid damage and/or significant or permanent deflection of deck.

B. Materials and equipment shall be stored in a location approved by the Owner.

1.07 WARRANTY

A. The Contractor shall provide a written warranty, warranting that all work of this Section shall remain serviceable and weathertight for a period of five years from date of final acceptance of the project; and to make good without expense to the Owner any work becoming defective during that period.

B. The Contractor shall deliver to the Owner, prior to final payment, the manufacturer's standard lifetime limited warranty for the asphalt shingles installed on this project along with all other requirements such as proof of purchase. The warranty shall be for the time period stated by the manufacturer for the particular shingle installed.

1.08 QUALITY CONTROL AND TESTING

A. The Owner reserves the right to provide quality control for this project including inspection services during reroofing operations to assure compliance with the specifications.

B. A pre-job conference may be required prior to the start of construction. The Contractor representatives must attend this conference.

C. The Contractor shall notify Roofing Consultant in sufficient time, whenever roofing work is to be done and provide safe access to roof for inspection.

D. The Contractor shall furnish Roofing Consultant with all pertinent job information prior to beginning work in accordance with Roofing Consultant directions.

PART 2 PRODUCTS

2.01 WOOD

A. Plywood: APA panel roof sheathing, exterior exposure. Minimum thickness: 1/2-inch with a span rating which meets or exceeds the spacing of the structural supports. Properly sized panel clips are required.

B. Wood Nailers: Construction grade lumber, size to match the existing boards, S4S, S-dry moisture content.

2.02 LAMINATED ASPHALT SHINGLES

A. Asphalt Shingles: Asphalt-coated glass felt, mineral granule surfaced, complying with ASTM D 3462; Class A fire resistance. 110 mph wind warranty (comply with all manufacturer's conditions and instructions). UL 2218 Class 3 impact resistance. The shingles must be algae resistant shingles. Manufacturer and shingle color:
   1. CertainTeed Corporation, www.certainteed.com.; Landmark PRO AR, random-tab, laminated shingles. Color: To be selected by the Owner.
   2. GAF Corporation, www.gaf.com.; Timberline HDZ, random-tab, laminated shingles. Color: To be selected by the Owner.
   3. Owens Corning Corporation, www.owenscorning.com; Tru Definition Duration random-tab, laminated shingles. Color: To be selected by the Owner.

B. Hip and Ridge Shingles:
   1. Certainteed Corporation: Cedar Crest Hip and Ridge Shingles.
   2. GAF Corporation: TimberTex Premium Ridge Cap Shingles.
   3. Owens Corning: Dura Ridge Hip and Ridge Shingles.
   4. Color match asphalt shingles.

C. Starter Course Shingles:
   1. Certainteed Corporation: Swift Start Starter Strip.
   2. GAF Corporation: Weatherblocker Premium Starter Strip Shingles.
   3. Owens Corning: Starter Strip Plus.

2.03 SHEET MATERIALS

A. Eaves and Valley Flashing Membrane: Self-adhering rubberized asphalt modified bituminous sheet backed by a layer of high density cross laminated polyethylene complying with ASTM D 1970, 40 mil total thickness, with split-back release film; as manufactured by:
   1. Certainteed Corporation: Winter Guard Eaves Flashing.
   2. GAF Corporation: Weather Watch Eaves Flashing.
   3. Owens Corning Corporation: Weather Lock Waterproofing Underlayment.

B. Synthetic Roofing Underlayment: Synthetic non-asphaltic sheet complying with ASTM D226 and D4869, intended by manufacturer for mechanically fastened roofing underlayment without sealed seams. Approved manufacturer and product or approved equal:
   1. Certainteed Corporation; Product: Diamond Deck.
   2. GAF Materials Corporation; Product: Deck Armor.
   3. Owens Corning Corp; Product: Deck Defense.

2.04 VENTS

A. Ridge Vents: Continuous shingle over ridge vent, molded plastic with external baffle. Exhaust vents must provide a minimum Net Free Ventilation Area of 18 square inches per lineal foot. As manufactured by:
   1. Air Vent Inc.: Shingle Vent II, Model Number SHFV203.
   2. GAF Corporation: Cobra Snow Country.
   3. Owens Corning Corporation: VentSure 4-Foot Strip Heat & Moisture Ridge Vents with Weather PROtector Moisture Barrier.

B. Ventilated Soffit Panels: .019" gauge prefinished aluminum, ventilation: 19.6 square inches per square foot net free area. Color to be selected by the Owner. Acceptable manufacturers or approved equal:
   1. Quality Edge, TruLine HP Series, Full Vent, 12 inches wide.
   2. ALSCO, Aluminum Soffit Triple 4", Full Vent, 12 inches wide.

C. Shingle Over Intake Vents: Continuous shingle over intake vent, molded plastic. Vents must provide a minimum Net Free Ventilation Area of 9 square inches per lineal foot. Follow the manufacturer's installation instructions. As manufactured by:
   1. Air Vent, Inc., The Edge Vent.
   2. CertainTeed Corporation, Shingle Over Intake Vent.
   3. DCI Products, Inc., Smart Vent.
   4. Owens Corning Corporation, InFlow Intake Vent.
   5. Lomanco Inc., Deck-Air Intake Vent.

2.05 SHEET METAL

A. Drip Edge: 0.019 prefinished aluminum, minimum 2-1/2-inch flange, 1½-inch face minimum, with ½-inch drip edge. Color: To be selected by the Owner.

B. Step Flashing: 0.019 prefinished aluminum. Size: 8-inches x 8-inches minimum.

C. Apron Flashing, Backer Flashing, Counterflashing and Miscellaneous Flashing: 0.024 gauge prefinished aluminum. Color: To be selected by the Owner.

D. Plumbing Vent Pipe Flashing: Fabricate from ASTM B 749, Type L51121, copper-bearing lead sheet, with a weight of 4 lbs./sq.ft., minimum thickness of 0.0625 inch. The sleeve must be sized to properly fit the pipe. The flange to sleeve connection must be suited for the intended slope. Flange Size: 4-inches beyond the sleeve diameter in each direction.

E. Replacement Fascia Cladding: Match existing materials and color.

2.06 SHEET METAL FABRICATION

A. Apron Flashing: Fabricate the apron flashing to match the intended slope. The vertical face shall extend up the wall 5-inches. The exposed face shall be 4-inches. The bottom edge of the apron flashing shall be hemmed 1/2-inch. See RTA Detail Nos. 8, 14 and 20.

B. Reglet-Mounted Counterflashing: The counterflashing shall be fabricated with the top edge bent to receive into the reglet 1½-inches. The face shall be a maximum of 4-inches and the bottom edge shall be hemmed and bent at 45 degrees to form a ½-inch drip. See SMACNA Figure 4-8A and RTA Detail Nos. 18 and 19.

C. Roof Curb Flashing: Fabricate the roof curb flashing components similar to SMACNA Figure 4-14.
   1. The counterflashing to protect the top edge of the roof curb apron, step and backer flashing shall be a surface mounted counterflashing with a caulk lip along its top edge and

hemmed drip edge along the bottom edge. See SMACNA Figure 4-8C. Counterflashing width: 4-inches minimum. See RTA Detail Nos. 7, 8 and 9.

2. The roof curb backer flashing shall be fabricated in accordance with NRCA Detail No. ASPH-3. The vertical leg shall be 8-inches tall. The roof slope leg shall be 12-inches. See RTA Detail No. 7.

D. Shingle Transition Flashing: See Section 07 6200 - Sheet Metal Flashing And Trim.

E. Replacement Fascia Cladding: Fabricate the fascia cladding to match existing.

F. ALTERNATE NO. 1 - Replacement Gutters and Downspouts: .027 prefinished aluminum, 6-inch K-style gutters. .019 prefinished aluminum, 3" x 4" corrugated rectangular downspouts. Utilize manufactured endcaps, outlet tubes, elbows, etc. wherever possible. Utilize commercially available heavy duty hidden hangers and downspout straps. Color to be selected by the Owner.

2.07 FASTENERS

A. NOTE: Staples will not be allowed for use on this project with the exception of attaching the synthetic underlayment and eaves flashing.

B. To secure the wood deck: 8d galvanized nails, long enough to penetrate into the supporting structure a minimum of 1-1/2-inches, and provide a minimum pull-out resistance of 100 pounds.

C. Roofing nails: Standard round wire shingle type, galvanized, of sufficient length to penetrate through roof sheathing, Sizes: 1-1/4-inch x .012 with 3/8-inch diameter nail head.

D. To secure the shingle over ridge vent: Minimum 3-inch hot dipped galvanized nails or as required by the selected ridge vent manufacturer. NOTE: Coil nails are not approved for use on this project.

E. Gasketed screws: Stainless steel, #10 or larger screw with thread and drill point as required with sealing neoprene washer.

2.08 REPLACEMENT VINYL SIDING AND TRIM

A. Vinyl Siding: Match the existing material, profile, texture and color.

B. J-Channel Flashing: Match the existing material, profile, texture and color.

C. Corner Post: Match the existing material, profile, texture and color.

D. Repair and replacement vinyl siding is to be conducted in accordance with the latest edition of the Vinyl Siding Institute, Vinyl Siding Installation Manual.

2.09 MISCELLANEOUS

A. Attic Insulation Baffles: Extruded polystyrene foam, Minimum Size: 48" x 22", Minimum Net Free Vent Area: 18.7 sq.in. as manufactured by:
   1. Owens Corning Corporation, Raft-R-Mate Attic Rafter Vents.
   2. ADO Products, Durovent Attic Rafter Vents.

B. Elastomeric Sealant: For sheet metal flashings, high performance, one component, polyurethane-base as manufactured by:
   1. Sika Corporation, Sikaflex - 1a
   2. Tremco, Inc., Vulkem 116
   3. RO-AN Corporation, Solar Seal #900

C. Plastic Cement: ASTM D 4586, asphalt plastic roof cement compatible with asphalt shingles.

D. Heat Trace Cable: Commercial grade cut to length, self-regulating cable, 240V. Acceptable manufacturer or approved equal:
   1. nVent RAYCHEM WinterGard Wet Self-Regulating Heating Cable.
   2. Contractor shall follow the latest printed installation instructions published by the manufacturer.

E. Replacement Hidden Hangers: 16 gauge galvanized steel as manufactured by or an approved equal:

1. AMSI Supply Company - Visit www.amsisupply.com.

PART 3 EXECUTION

3.01 DEMOLITION AND SUBSTRATE PREPARATION

A. Verification, rerouting and connection of duct work to existing bathroom fans, installation of attic baffles and any other attic work must be done while the attic is open and accessible to the Contractor. No provisions will be made to accommodate attic access after the new roof system is installed.

B. The Contractor shall photographically document all damaged building components, window screens, building grounds, drives and sidewalks prior to the job start to record pre-existing conditions.

C. Remove only the amount of existing shingles that can be replaced on the same day. All flashings, counterflashing, hip cap and ridge cap shingles must be completed on the same day.

D. Remove and discard the following components or prepare surfaces as described:
   1. Remove and discard the two layers of asphalt shingles, drip edge, underlayment and miscellaneous debris down to the structural roof deck.
   2. Remove and discard the existing ridge cap shingles, hip cap shingles and ridge vent. Extend the length of the ridge opening to the maximum length in accordance with the ridge vent manufacturer's requirements. Recut the width of the deck openings as shown in RTA Detail No. 5.
      a. NOTE: Ridge vent is only to be installed over west apparatus bay. See Roof Plan.
   3. Remove and discard the existing plumbing vent stack flashings. Remove repair materials where present.
   4. Remove and discard the existing heat trace cable.
   5. Remove and discard existing power ventilators. Disconnect the existing electrical service and cap wires within the existing, or provide new junction box. Cut back the roof deck at the resultant openings. Minimum size of infill roof deck: 4-feet by 4-feet (or two spans).
   6. Remove the existing nails/staples or drive them flush with the deck to provide a smooth substrate for installing the new shingle roof.
   7. Temporarily loosen and displace vinyl siding to facilitate flashing removal and replacement. Remove and discard the vinyl j-channel adjacent to the shingles. Trim back the vinyl siding to provide one-inch clearance between the bottom of the siding and the new asphalt shingles.
   8. Remove and discard existing sheet metal step and apron flashings. Remove repair materials where present.
   9. Save and reuse existing vent stack flange, sleeve and umbrella flashings.
   10. Remove and discard sheet metal roof panels, flashings and water diverters on south shed roof located at the end of the covered entrance.
      a. NOTE: Temporarily remove adjacent sheet metal panels and ridge cap flashings as needed to allow for removal of existing roof system.
      b. NOTE: The new roof system for the south shed roof shall be asphalt shingles.
   11. Remove and discard enough roof deck sheathing to allow accress into the west apparatus bay attic space as required to cover the gable end vent opening, to allow for the installation of attic insulation baffles and removal of attic insulation covering the north soffit.
      a. Block open gable end vent in the west apparatus bay attic from the attic side with the specified plywood sheathing. Cut the plywood to properly fit the opening. Secure the plywood to adjacent wood framing with 8d galvanized nails spaced 9-inches on center around the entire perimeter of the plywood.
   12. Remove and discard enough roof deck sheathing to allow access into each attic space. Check for bath fan ducts that are uninsulated or venting into the attics.
      a. Remove uninsulated bath fan ducts and install new insulated ducts. Secure the insulated ducts to the fan units using stainless steel drawbands.

b. In the original attic space (the attic with the cupola), locate the attic access used from the building interior and notify the Owner of the location of the interior attic access. If no attic access is found, construct an attic access using plywood and wood blocking to isolate the attic access from the attic insulation. Mechanically fasten the plywood and wood blocking to the surrounding structural trusses. Attic access size: 24-inches by 30-inches. Locate the new attic access at an interior hallway for ease of access. Discuss the location of the attic access with the Owner prior to starting this work item. Locate the access as directed by the Owner. Cover the attic access opening with 12-inch thick fiber glass batt insulation.

13. Remove and discard damaged sheet metal fascia cladding on north eaves edge of west apparatus bay. NOTE: This work is to be included in the Base Bid.
14. Remove and discard the existing soffit panels on north eaves edge of west apparatus bay.
15. Trim the existing plywood soffit panels on north eaves edge of west apparatus bay to the maximum width opening while leaving enough plywood soffit to install new prefinished aluminum j-channel and the new 100% perforated soffit vents. Minimum cut opening width: 9-inches. See RTA Detail No. 16.
16. Cut and remove a slot of the west apparatus bay roof deck, approximately 3-feet upslope from the south eaves edge to facilitate the shingle over intake vent installation (see the RTA Detail No. 17 and Roof Plan). A minimum slot cut out of 1-inch is required to provide intake ventilation. Stop the slot cut out at valleys and rake edges as required by the vent manufacturer.
17. The existing gutters and downspouts shall remain in place. Protect gutters and downspouts from damage during reroofing operations. Temporarily displace the gutters and downspouts as necessary to facilitate reroofing operations.
    a. If Alternate No. 1 is accepted, see Section 01 2300 - Alternates and the Roof Plan for gutters and downspouts to be removed and replaced. Do not replace designated gutters and downspouts unless approved by the Owner.
    b. NOTE: See Section 07 5300 - Elastomeric Membrane Roofing for new gutters on low slope roof areas.
18. Existing downspouts which discharge into below grade drain pipes are to be temporarily removed from the below grade drain pipes to prevent debris from entering the drain pipes.
19. Properly seat backed out gutter spikes.
20. Cut 1-1/2" deep reglets to receive new counterflashing at masonry walls.
21. Remove and discard the existing aluminum siding, cornerposts and ell metal at the base of the Cupola to facilitate flashing removal and replacement.
22. Closely inspect all roof decking and exposed wall sheathing. Remove and replace all warped, delaminated or deteriorated decking and sheathing. Replacement roof decking and sheathing shall match the existing sheathing.
    a. NOTE: Roof decking and wall sheathing replacement shall be bid as an extra, see Unit Prices Section and the Bid Form.
23. Inspect the fastening pattern used to secure the existing roof decking. Install additional fasteners as required to properly secure the existing roof decking.
24. Blow off or sweep the roof deck clean prior to installing new materials.
25. See Section 07 5300 - Elastomeric Membrane Roofing for additional demolition and surface preparation.

3.02 INSTALLATION PROCEDURES

A. General
1. The Contractor shall comply with the manufacturer’s instructions, except where more stringent requirements are indicated herein.
2. The Contractor for this work shall insist on a thoroughly dry deck surface before beginning work. The Contractor should see that the deck is free of moisture, frozen scale and other foreign matter. Do not apply roofing materials when moisture in any form can be seen on the felt underlayment and/or on the surface to which those materials will be applied.

3. Do not install any roofing materials during rain or other inclement weather. One exception is that temporary work may be installed during such weather to protect the building interior. Remove all temporary work and materials that have been exposed to such weather, then install permanent materials as specified during acceptable weather conditions.
4. Any areas in the existing roof that are damaged during construction shall be repaired with materials to match existing as directed by the Owner's Representative.
5. Schedule and supervise work crews so that the area of roofing begun one day is completely finished before leaving the job site that day. Included are all flashings within each day's work area.

B. Attic Baffles
1. Install full length baffles between existing trusses and rafters along the north eaves edges of the west apparatus bay. Ensure that both ends of each baffle are unobstructed. Secure the baffles with staples to prevent displacement.

C. Wood Deck Replacement
1. Install replacement decking with the long dimension across the supports. Leave a 1/8-inch gap at all edges and end joints. Install new panel clips between each support. The new decking must span a minimum of three supports.
2. Mechanically attach the new wood decking to the underlying supports using the specified fasteners. Fasten the wood decking edges 6-inches on-center, and 9-inches on-center into the intermediate supports.
3. Install new wood decking to eliminate the resultant openings at the prior power ventilator locations. Mechanically attach the wood decking as described above. Include this work item in the Base Bid.
4. Install new wood decking at the attic access location on the west apparatus bay. Mechanically attach the wood decking as described above. Include this work item in the Base Bid.
5. Install new wood decking where the existing decking was removed due to deterioration. Mechanically attach the wood decking as described above. This work item is a unit price extra.

D. Drip Edge
1. Install the sheet metal drip edge directly over the deck tight with the fascia along the eaves. Install the drip edge over the underlayment along the rakes. Fasten the drip edge 12-inches on-center with roofing nails. Shingle lap the end joints 2-inches.

E. Eaves Flashing
1. The eaves flashing shall be fully-adhered to the roof deck and lapped in accordance with the eaves flashing membrane manufacturer's installation instructions.
2. Install eaves flashing at the eaves edges of the steep-sloped roofs. The eaves flashing shall extend from the eaves up the slopes of the roofs a minimum distance of 68-inches (2 full width sheets). The eaves flashing shall be installed over the flange of the sheet metal drip edge at the eaves and below the flange of the drip edge at the rake edges.
3. Install eaves flashing to provide 100% coverage on the south shed roof, adjacent to sheet metal canopy, and as shown on the Roof Plan.
4. Install two full width sheets of eaves flashing in the valleys parallel with the valley center line. Lap the sheets of eaves flashing in accordance with the RTA Details. The eaves flashing protection shall extend 24-inches on each side of the valley center line. Lap end joints a minimum of 6-inches. Lap the adjacent synthetic underlayment onto the valley eaves flashing a minimum of 6-inches.
5. Install half width sheets of eaves flashing up the adjacent front and side wall locations a minimum of 6-inches. Lap the eaves flashing onto the adjacent roof deck synthetic underlayment 12-inches minimum as shown in the RTA Details.
6. Install half width sheets of eaves flashing on each side of the cupola. Extend the eaves flashing up the vertical sides of the cupola 6-inches. Lap the eaves flashing onto the

adjacent synthetic underlayment. Cover the remaining walls with eaves flashing or building wrap.

7. Install eaves flashing at the rooftop penetration locations. Extend the eaves flashing onto the deck a minimum of 12-inches in all directions. Install a second layer of eaves flashing following the penetration flashing installation and extend 6-inches beyond the flashing flange limits on the upslope and sides of the flashing flange.
8. Install eaves flashing on areas shown on the Roof Plans. Provide coverage as shown.
9. Install additional sheets of eaves flashing in susceptible leak locations.

F. Underlayment
1. Install underlayment in strict accordance with the selected roof covering manufacturer's requirements to achieve UL listed, Class A fire rating. Select the manufacturer's recommended underlayment to meet the Class A rating.
2. Install one ply of underlayment over the entire surface of the steep-sloped roof decks free of wrinkles, tears and voids. Install the underlayment in accordance with NRCA Section 3.2.1 and Figure 2 and RTA Details.
3. The underlayment shall be secured with as many fasteners as necessary to hold it in place. The underlayment shall be installed parallel to the eaves, with 3-inch sidelaps and 6-inch end laps. End laps in adjacent courses of underlayment shall be staggered a minimum of 6 feet.

G. Asphalt Shingle Installation
1. Install the shingles in accordance with the manufacturer’s specifications and recommendations.
2. Use chalk lines to align the shingles horizontally during installation. Chalk line use is mandatory.
3. Install the starter courses of shingles along the eaves and rake edges. Position the starter shingles ½-inch minimum beyond the drip edge. Secure the shingles with a minimum of four nails per shingle.
4. Secure the shingles in accordance with the shingle manufacturer’s requirements, using a minimum of four nails per full shingle, or two per partial shingle. Do not secure above the nail lines stamped on the shingles to ensure that each nail is driven through two layers of shingles.
   a. NOTE: Exposed nails (fasteners driven too low) and the punctured shingle must be removed and replaced. Covering nail heads with sealant in the field of the roof is not acceptable.
   b. NOTE: Asphalt shingles must extend beyond the eaves edge and rake edge drip edge flashing 1/2-inch minimum regardless of the selected shingle manufacturer's installation instructions to the contrary.
5. Install shingles in the valleys using the closed-cut valley method; see the RTA Details. The closed side shingles shall extend 12-inches minimum beyond the valley centerline. The cut side shingles shall be cut approximately 2-inches above the valley centerline. Clip the upper corners from the top edge of each cut side shingle as required to direct water into the valley.
6. Install ridge cap shingles with proper exposure and proper nail placement as required by the manufacturer.

H. Vents
1. Install shingle over ridge vents continuously along the ridges in accordance with the manufacturer’s requirements. The ridge vent shall extend from gable end to gable end or from gable end to vertical wall. Use chalk lines to assist with the proper alignment of the ridge vent. Temporarily secure the ridge vent with appropriate length roofing nails. Install ridge cap shingles in accordance with the ridge vent manufacturer’s requirements.
2. Verify the minimum 9-inch cut out in the north plywood soffit of west apparatus bay roof area. Secure new prefinished aluminum j-channel to the remaining edge of the plywood soffit. Install new properly sized 100% perforated undereave soffit panels. Properly lock and secure the soffit panels as required by the manufacturer.

3. Verify the 1-inch slot cut out openings in the roof deck located along the south eaves edge on the west apparatus bay roof and the eaves flashing and shingles are installed up to the slot cut out. Trim back eaves flashing and shingles to remove obstructions from the slot cut out. Install the new intake vent over the slot cut out in accordance with the shingle over vent manufacturer's instructions. Temporarily secure with 3-inch long roofing nails spaced 12-inches on center.
    a. Install eaves flashing on the shingle over intake vent and extend the eaves flashing upslope and onto the roof deck as required by the manufacturer.
    b. Install shingles over the intake vent in accordance with the vent manufacturer's instructions.

I. Apron Flashing
1. Install apron flashing at front wall locations. Install the flashing over the top course of shingles in accordance with NRCA Section 3.6.4.1 and Figures 17 and 18. Extend the flashing a minimum of 5-inches up the vertical surface and 4-inches onto the roof surface. Extend the apron flashing beyond the wall corners 4-inches minimum. Install the apron flashing behind the vinyl siding or counterflashing so the apron flashing top edge is protected. Fasten the apron flashing to the roof deck only with roofing nails spaced 12-inches on center. Seal the exposed nail heads with color matching polyurethane sealant.

J. Step Flashing
1. Verify that eaves flashing is turned up the wall prior to installing the sheet metal step flashing. Install step flashing at side wall locations in accordance with NRCA Section 3.6.4.2 and Figure 19. Install the step flashing behind the vinyl siding or counterflashing so the step flashing top edge is protected. Fasten the step flashing to the roof deck only. The bottom most step flashing card shall be installed to allow collected rain water and debris to be diverted back onto the roof (see NRCA Section 3.6.4.2 and Figures 20 and 21).

K. Roof Curb Flashing
1. Verify that eaves flashing is turned up the sides of the roof curb prior to installing the sheet metal flashing. Install new apron flashing, step flashing and backer flashing at the roof curb as shown in NRCA Detail No. ASPH-3. The upslope edge of the backer flashing shall be sealed with additional strips of eaves flashing. Properly engage the flashing with the shingles. Secure flashings to the roof deck only. Provide 4-inch maximum exposure of the backer flashing.
2. Install new surface mounted counterflashing around each side of the penetration as shown in SMACNA Figure 4-8C. The counterflashing shall cover the flashing by 3-inches. Form and lap the corners to a watertight condition. Secure the counterflashing with gasketed screws spaced 6-inches on center. Apply sealant and tool the caulk lip to promote adhesion and watershedding capabilities.

L. Counterflashing
1. Counterflashing: Install new prefinished counterflashing at the masonry walls in accordance with SMACNA Figure 4-8A and RTA Details. Receive the counterflashing into new or existing reglets in the masonry. Secure the counterflashing in the reglet with lead wedges spaced 12-inches on-center or a minimum of two wedges per length. Apply sealant and tool the caulk lip to promote adhesion and watershedding capabilities.

M. Plumbing Vent Flashing
1. Install the specified lead flashing at the vent stacks in accordance with NRCA Detail No. ASPH-8. Properly lap the shingle courses with the flashing flanges. Set the flange in a bead of the specified sealant and secure with roofing nails. Extend the flange width with strips of eaves flashing. Trim the shingles to closely fit the flashing. Seal all exposed nails with the specified sealant. Turn the sleeve into the pipe no less than one-inch without making relief cuts in the sleeve portion of the flashing.

N. Hot Vent Stacks
1. Reinstall existing flange, sleeve and umbrella flashing at the base of the hot vent stacks. Set the flange in beads of the specified sealant and secure with roofing nails. Strip in the

top and side edges of the flange with 12-inch wide strips of eaves flashing. Apply a continuous bead of the specified elastomeric sealant around the top edge of the umbrella flashing and tool the joint.

2. Reinstall the rain cap flashing on the vent stack. Fasten the rain cap flashing as recommended by the manufacturer to resist wind damage.

O. Vinyl Siding and Trim
   1. Verify eaves flashing is turned up the front and side walls as specified.
   2. Install building wrap on wall substrates where missing. Follow manufacturer's installation instructions.
   3. Install new j-channel flashing adjacent to the new shingles. Provide 1-inch clearance between the j-channel flashing and the shingles. Secure the new j-channel 8-inches on center with siding nails.
   4. Reinstall the vinyl siding as originally installed. Lock the siding panels together and secure each nailing hem with siding nails spaced 8-inches on center.
   5. Replace cracked, warped and unlocked vinyl siding with new matching vinyl siding. Follow the installation instructions as printed by VSI, Vinyl Siding Installation Manual.
   6. Install new vinyl siding, cornerposts and vinyl trim on the base of the cupola in accordance with the manufacturer's requirements.
   7. DO NOT FACE NAIL THROUGH THE SIDING. FACE NAILS WILL BE REJECTED AND REPLACEMENT VINYL SIDING WILL BE INSTALLED AT THE CONTRACTOR'S EXPENSE.

P. Shingle Transition Flashing - See Section 07 6200 - Sheet Metal Flashing And Trim.

Q. Gutters and Downspouts
   1. Base Bid: Reuse the existing gutters and downspouts on steep slope roofs.
   2. Alternate No. 1: Install new seamless 6-inch aluminum gutters and 3"x4" downspouts.
      a. Secure and seal the joints between gutter sections and fabricated corners, outlet tubes and end caps using pop rivets and the specified sealant. Secure the gutter to the fascia with heavy duty hidden hangers spaced 30-inches on center. Positively slope the gutters to drain.
      b. Install new downspouts at existing downspout locations. See Roof Plan for approximate locations. Attach the downspouts to the gutters in accordance with SMACNA Figure 1-33B, Detail 1. Secure the new downspouts to the existing wall with a minimum of two downspout straps and appropriate fasteners in accordance with SMACNA Figure 1-35G. Provide elbows as required. Downspouts are to discharge into existing below grade drain pipes.

R. Miscellaneous
   1. Return loosened or displaced gutters and downspouts to their original position and resecure as originally secured.
      a. NOTE: Clean out the existing gutters and downspouts after the new shingle roof systems are installed and before reconnecting downspouts to below grade drain pipes.
   2. Reinstall existing sheet metal roof panels and ridge cap flashings on south canopy.
   3. Apply the specified sealant over all exposed fastener heads at the ridge cap and penetration flashing flanges.
   4. Install new heat trace cable along the eaves edge, in the gutters and in the downspouts to a point below grade IN STRICT ACCORDANCE WITH THE MANUFACTURER'S INSTALLATION INSTRUCTIONS. Install in same locations as existing heat trace cable. See Roof Plan for approximate locations. Mechanically fasten the heat trace cable with non-penetrating fastening devices to the new shingles. Connect to the existing dedicated circuit.

5. Replace the existing light gauge hidden hangers with new specified hidden hangers on south sheet metal canopy gutters. Hidden hanger spacing: 30-inches maximum.

END OF SECTION

SECTION 07 5300
ELASTOMERIC MEMBRANE ROOFING

PART 1 GENERAL

1.01 RELATED DOCUMENTS

A. This Section is part of the entire set of Contract Documents and shall be coordinated with the applicable provision of the other parts.

1.02 SECTION INCLUDES

A. Demolition and substrate preparation.

B. Elastomeric roofing membrane, adhered conventional application.

C. Gypsum barrier board.

D. Prefabricated pipe flashing.

E. Wood blocking and nailers.

1.03 RELATED REQUIREMENTS

A. Section 07 3113 - Asphalt Shingles.

1.04 REFERENCE STANDARDS

A. ASTM A653/A653M - Standard Specification for Steel Sheet, Zinc-Codted (Galvanized) or Zinc-Iron Alloy-Coated (Galvannealed) by the Hot-Dip Process; 2015.

B. ASTM D412 - Standard Test Methods for Vulcanized Rubber and Thermoplastic Elastomers--Tension; 2006a (Reapproved 2013).

C. ASTM D4637/D4637M - Standard Specification for EPDM Sheet Used in Single-Ply Roof Membrane; 2015.

D. UL (DIR) - Online Certifications Directory; current listings at database.ul.com.

E. UL (FRD) - Fire Resistance Directory; current edition.

1.05 SUBMITTALS

A. Maintain a copy of the building permit at the site during construction at all times. Upon request, provide a copy of the building permit to the Owner for their records.

B. Materials List
   1. Before any materials of this Section are delivered to the jobsite, submit to the Owner a complete list of all materials, including manufacturer's names, to be furnished and installed under this portion of the work.
   2. Provide Material Safety Data Sheets (MSDS) to the Owner for any materials prior to delivery to the site.

C. Manufacturer's Documentation
   1. Provide test documentation from an approved testing agency (FM, UL, ICC) indicating that the roofing system meets a Class A designation for the intended roof slope in accordance with current IBC building code requirements.
   2. Submit copies of manufacturer's field reports and documentation of completion.
   3. Submit manufacturer's report that roof has been inspected and is suitable and acceptable for warranty specified.

D. Shop Drawings
   1. Before any materials of this Section are delivered to the jobsite, submit complete shop drawings of roofing system installation details and sheet metal work to the Owner for review.

E. Subcontractors, Material Suppliers and Services List: Submit a list of subcontractors, material suppliers and any company that will be used to supply labor or materials or services for this project. The list must provide company name, company address, company phone and fax

numbers and the contact person for each company listed. The Owner reserves the right to reject any subcontractor, material supplier or service provider.

F. Safety and Work Schedule
   1. Submit copies of your written Safety Plan to the Owner.
   2. Submit a written work schedule to the Owner with a detailed time line from Contract Award to project completion.

G. Product Data: Provide data indicating membrane materials, flashing materials, insulation, fasteners, and adhesives and sealants.

H. Warranty: Submit manufacturer warranty and ensure forms have been completed in Owner's name and registered with manufacturer.

I. As-Built Drawings: As part of the project close out process, the Contractor shall prepare as-built drawings using the original design drawings revised to reflect any changes made in the field issued by change order or by change directive for components which vary from the original design. The Contractor shall prepare the as-built drawings and submit the as-built drawings to the Owner for their use.

1.06 QUALITY ASSURANCE

A. Manufacturer Qualifications: Company specializing in manufacturing the products specified in this section with minimum three years of documented experience.

B. Roofing installer must be currently approved by the manufacturer of the selected roofing system.

C. Accomplish work under this Section in strict accordance with the roofing manufacturer's published specifications and best trade practices to achieve a completely watertight roofing and flashing installation.

D. Provide materials which have been tested, listed and labeled by Underwriters Laboratories (UL).

E. The Roofing Contractor will be responsible for measurements. Before ordering material, preparing shop drawings, or doing any work, verify at the site all dimensions which may affect the work. The Roofing Contractor assumes full responsibility for the accuracy of figures. No allowance for additional compensation will be considered for discrepancies between dimensions on the drawings and actual field dimensions.

F. Immediately refer to any conflicts among requirements of these specifications on drawings, those of regulatory agencies, material manufacturer's recommendations and good roofing practices to the Roofing Consultant.

G. Final results are the entire responsibility of the Roofing Contractor.

H. Installer Qualifications: A single installer ("Roofer") shall perform work of this section; and shall be a firm with not less than 5 years of successful experience in installation of roofing systems similar to those required for this project and which is acceptable to or licensed by manufacturer of primary roofing materials.
   1. Installer Certification: Obtain written certification from manufacturer of roofing system certifying that Installer is approved by manufacturer for installation of specified roofing system. The certification shall be submitted with the bid.
   2. Installer's Field Supervision: Installer must maintain full-time supervision on jobsite during times that roofing work is in progress. Supervisor must have a minimum of 5 years experience in roofing work similar in nature and scope to specified roofing.
   3. Installer’s References: Installer must submit three references for successful projects of similar size and similar system installation.

1.07 PRE-CONSTRUCTION MEETING

A. Prior to scheduled commencement of roofing work, the Roofing Contractor and representatives of other entities directly concerned with performance of roofing system shall have a pre-construction meeting. Review requirements (contract documents), submittals, status of

coordinating work, availability of materials and installation facilities and establish preliminary installation schedule. Review requirements for inspections, testing, certifications, forecasted weather conditions, governing regulations, insurance requirements, and proposed installation procedures. The Roofing Contractor shall record the items discussed including agreement or disagreement on matters of significance; furnish copy of recorded discussions to each participant. Review foreseeable methods and procedures related to roofing work, including but not necessarily limited to the following:

1. Tour representative areas of roofing substrates, inspect and discuss conditions of substrate.
2. Review roofing system requirements (drawings, specifications and other contract documents).
3. Review required submittals.
4. Review and finalize construction schedule related to roofing work and verify availability of materials, Installer's personnel, equipment and facilities needed to make progress and avoid delays.
5. Review required inspection, testing, certifying and material usage accounting procedures.
6. Review weather and forecasted weather conditions and procedures for coping with unfavorable conditions, including possibility of temporary roofing.

1.08 DELIVERY, STORAGE, AND HANDLING

A. Deliver materials in manufacturer's original containers, dry and undamaged, with seals and labels intact.

B. The Roofing Contractor must get approval from the Owner for the location of all stored materials prior to delivery.

C. Ensure storage and staging of materials does not exceed static and dynamic load-bearing capacities of roof decking.

D. Store and handle roofing materials in a manner which will prevent moisture damage. Store adhesives and flashings in a dry, warm, well-ventilated, weather-tight place. Handle and store materials or equipment in a manner to avoid significant or permanent deflection of deck.

E. The Roofing Contractor shall properly protect the roof areas used to access the designated areas of roof removal and replacement. The number of traffic paths shall be kept to a minimum. The existing roofs shall be protected by placing rigid insulation and plywood over the roof surface. The Roofing Contractor shall also use precautions to prevent damage to the existing roofs in the replacement areas. Any damage to the existing roofs shall be repaired immediately to prevent leakage into the roof and interior of the building.

1.09 WARRANTY

A. Furnish the Owner with a Contractor’s written warranty covering all materials and workmanship for a period of two years.

B. Manufacturer’s Warranty: Furnish Owner with the selected roof system manufacturer’s 20-year total system warranty covering all materials and labor.

PART 2 PRODUCTS

2.01 EPDM MEMBRANE

A. Performance: Provide roofing materials recognized to be of generic type indicated and tested to show compliance with indicated performances, or provide other similar materials certified in writing by manufacturer to be equal or better than specified in every significant respect, and acceptable to Owner's Representative.

B. Compatibility: Provide products which are recommended by the selected material manufacturer to be fully compatible with indicated substrates, or provide separation materials as required to eliminate contact between incompatible materials.

C. EPDM Membrane Materials:

1. The roofing system to be utilized for this project shall be a fully-adhered EPDM system manufactured by one of the following:
    a. Carlisle SynTec Incorporated, www.carlisle-syntec.com, Sure-Tough Universal Roofing System; Design "A" - Adhered.
    b. Holcim Elevate, www.holcimelevate.com, RubberGard MAX Fully-Adhered System.

D. Membrane: Ethylene-propylene-diene-monomer (EPDM); externally reinforced with fabric; complying with minimum properties of ASTM D4637/D4637M.
    1. Thickness: 60 mil, 0.060 inch (1.5 mm).
    2. Membrane shall be 0.060-inch thick, reinforced, EPDM (Ethylene Propylene Diene Monomer) compound elastomer. Membrane sheet size shall be the largest sheet possible as determined by the job conditions.

E. All materials used in the roofing system shall be as furnished by the approved manufacturer. Seam tape, adhesives, cements, sealant, water cut-off mastic and other required items shall be as furnished or recommended by the selected manufacturer.

F. All details relating to the installation of the roof system shall be approved by the roofing manufacturer and installed in such a manner that the manufacturer will furnish its 20-year total system warranty for the installation.

G. Base Flashing: Flashing shall be a .060-inch thick cured and uncured EPDM flashing sheet as furnished by the approved manufacturer.

2.02 ACCESSORIES

A. Prefabricated pipe flashings, termination bars, walkway pads, insulation plates and fasteners and perimeter edge termination plates and fasteners as required by the selected membrane manufacturer for use in their roof system assemblies.

2.03 BARRIER BOARD

A. Fiberglass mat faced gypsum roof board: Fire resistance rating (UL 790 and ASTM E108): Class A, Thickness: ½-inch. Size 4-feet by 8-feet.
    1. Acceptable product or approved equal: GP Gypsum, DensDeck Prime.

2.04 WOOD

A. Wood nailers and blocking: PS 20, construction grade lumber.
    1. Sizes: Nominal sizes as indicated on drawings, S4S.
    2. Moisture Content: S-dry or MC19.
    3. Species: SPF.
    4. Grade: No. 2.

B. Plywood: APA panel roof sheathing, exterior exposure. Minimum thickness: 1/2-inch with a span rating which meets or exceeds the spacing of the trusses.

C. Fasteners in contact with wood blocking and nailers shall be Type 304 or Type 316 stainless steel or hot-dipped galvanized in conformance with ASTM A153.

2.05 SHEET METAL FLASHING AND TRIM

A. See Section 07 3113 - Asphalt Shingles for sheet metal related to the steep-slope roof areas.

B. See Section 07 6200 - Sheet Metal Flashing and Trim.

2.06 MISCELLANEOUS

A. New Gutter and Downspout Components: 0.027 prefinished aluminum, 6-inch K-style gutters. 0.019 prefinished aluminum, 3" x 4" corrugated rectangular downspouts. Utilize manufactured endcaps, outlet tubes, elbows, etc. wherever possible. Utilize commercially available heavy duty hidden hangers and downspout straps. Color to be selected by the Owner.

PART 3 EXECUTION

3.01 EXAMINATION

A. Verify that surfaces and site conditions are ready to receive work.

B. Verify deck is supported and secure.

C. Verify deck is clean and smooth, flat, free of depressions, waves, or projections, properly sloped and suitable for installation of roof system.

D. Verify deck surfaces are dry and free of snow or ice.

E. Maintain a daily watertight condition in the existing roof areas. At no time shall the existing roof remain vulnerable to moisture intrusion. Overnight tie-ins are required regardless of the weather forecast.

3.02 DEMOLITION AND SURFACE PREPARATION

A. Remove and discard the existing EPDM roof membrane, insulation, base flashings and miscellaneous debris down to the structural deck.
   1. Back out the insulation screw fasteners using screw guns. No shearing of screw fasteners allowed.
   2. NOTE: Remove debris, scrap and rubbish from the roof areas and building grounds daily.

B. Remove and discard the existing sheet metal drip edge, receiver mounted counterflashing and other sheet metal flashing accessories. Existing sheet metal receiver to remain and be reused with new counterflashing.

C. Remove and discard the termination bars and fasteners from the walls. Remove repair materials from the walls.

D. Remove and discard existing plumbing vent pipe flashing. Clean off all repair materials from the pipe.

E. Remove and discard the existing gutters and downspouts on low slope roof areas only.

F. Deteriorated wood nailers and plywood shall be completely removed and discarded. Install new wood nailers and plywood as necessary to match the existing nailers in size and shape, or as directed by the Owner.
   1. NOTE: Wood nailer and plywood replacement shall be bid as a Unit Price extra. See the Bid Form and Section 01 2200-Unit Prices.

G. See Section 07 3113 - Asphalt Shingles for additional demolition and surface preparation requirements.

3.03 INSTALLATION PROCEDURES

A. General: Comply with manufacturer's instructions, except where more stringent requirements are indicated herein.

B. Details relating to the installation of the new roof system shall be approved by the selected roofing material manufacturer and the Roofing Consultant and installed in such a manner that the manufacturer will furnish the specified warranty for the installation.

C. Do not begin roofing work until all decks, walls, curbs, nailers, accessories, and underlying substrates are ready and acceptable to have roofing materials installed. Deck surfaces must be clean, smooth, dry and free of moisture prior to beginning roof application.

D. Schedule and supervise work crews so that the area of roofing begun one day is completely finished before leaving the job site that day. Included are all flashings within each day's work area and adjoining the membrane.

E. Do not install any roofing materials during rain or other inclement weather. One exception is that temporary work may be installed during such weather to protect the building interior and new materials that are already installed. Remove all temporary work and materials that have been exposed to such weather, then install permanent materials as specified during acceptable weather conditions.

F. At the end of each day's roofing installation, protect edge of incomplete work, including membrane and insulation. Provide temporary water cut-offs to provide a weather tight seal to both the roof deck and existing roof membrane. Remove temporary water cut-off materials at the beginning of next day's work.

G. Materials must be stored dry and protected with tarps and on pallets at all times. Wet or damaged materials will be removed from the job site.

3.04 WOOD DECK REPLACEMENT

A. Install replacement decking with the long dimension across the supports. Leave a 1/8-inch gap at all edges and end joints. Install new panel clips between each support. The new decking must span a minimum of three supports.

B. Mechanically attach the new wood decking to the underlying supports using the specified fasteners. Fasten the wood decking edges 6-inches on-center, and 9-inches on-center into the intermediate supports.

C. Install new wood decking where the existing decking was removed due to deterioration. Mechanically attach the wood decking as described above. This work item is a unit price extra.

3.05 WOOD NAILERS

A. Cut 4-inch wide strips of 1/2-inch plywood for installation at gutter edges.

B. Install 4-inch wide strips of plywood as designated on the RTA Details. The plywood shall be secured to the existing plywood roof deck with 8d nails in two staggered rows spaced 12-inches on center.

C. Install new wood nailers where the existing wood nailers were removed due to deterioration. The new nailers shall be secured using the same methods that the originally installed nailers were secured and/or in a manner to provide solid securement.

3.06 GYPSUM BARRIER BOARD

A. Mechanically fasten 1/2-inch gypsum board with tight, staggered board joints to existing plywood roof deck. Neatly cut to fit edges and penetrations.

1. One approved fastener per 2.67 square feet (12 fasteners per 4-foot by 8-foot board) of gypsum barrier board.

3.07 INSTALLATION - MEMBRANE

A. Roofing membrane system shall be installed following the application requirements of the selected roof membrane material manufacturer. The latest printed instructions will govern the application procedure.

B. Evenly apply adhesives at rate recommended by manufacturer to both the underside of the membrane and the gypsum barrier board. Apply bonding adhesive uniformly, stopping short of the splice areas along the seams and base tie-ins. Allow the adhesive to flash off until tacky.

C. Reposition the membrane, free of air pockets and wrinkles. Firmly press the sheet into place without stretching with a push broom.

D. Overlap edges and ends and seal by manufacturer's recommended dimensions.

E. Shingle lap joints on sloped substrates in the direction of drainage.

F. Complete the roof membrane seams with the roof membrane manufacturer's seam tape. Apply the seam tape in accordance with the roof membrane manufacturer's instructions, including seam preparation work, proper seam tape alignment and exposure. Roll the completed seam with a hand roller across and along the seam.

G. Secure the roof membrane with the roof membrane manufacturer's reinforced securement strips at base tie-ins. Fasten the securement strips with the roof membrane manufacturer's approved fasteners and plates. After adhering the roof membrane to the reinforced securement strip, roll the splice area with a hand roller across the strip over the length of the splice.

H. Extend the roof membrane down the vertical face of the perimeter edges to a point 1-inch below the bottom of the wood nailer(s). Secure the membrane with roofing nails spaced 12-inches on center.

I. Apply T-joint covers, stripping and appropriate sealant where specified by the selected roof membrane manufacturer.

3.08 FLASHING INSTALLATION

A. Perimeter edge flashing, wall flashing and round vents shall be installed in accordance with the selected material manufacturer's flashing details using the longest pieces practicable. Roll the flashing with a silicone hand roller to improve adhesion. The installed flashing shall be fastened along the top edge 12-inches on-center (maximum). The latest printed flashing instructions must be followed as issued by the material manufacturer.

1. NOTE: ALL FLASHINGS SHALL BE COMPLETED DAILY AS THE PROJECT PROGRESSES WITH THE INSTALLATION OF THE NEW ROOF SYSTEM.

B. Install termination bar at the horizontal and vertical ends of the base flashing as required by the manufacturer. The termination bar shall be mechanically fastened (12-inches on-center, maximum) into slotted holes. The termination bar and fastener heads shall be sealed with the specified polyurethane sealant.

3.09 PENETRATION FLASHINGS

A. Flash all penetrations (pipes, conduits, etc.) passing through the membrane. Factory prefabricated pipe flashing shall be used to flash all pipes where installation is possible. Where factory prefabricated pipe flashing cannot be installed, field fabricated pipe flashing may be used. All flashings and terminations shall be done in accordance with approved manufacturer's details.

3.10 SHINGLE TRANSITION FLASHING

A. Extend the roof membrane below the new shingles as shown in RTA Details and in accordance with selected membrane manufacturer's shingle transition detail. Apply a continuous bead of water cut-off mastic between the roof deck and the roof membrane. Secure the top edge of the membrane with sheet metal counterflashing. Install the counterflashing with 4-inch wide end joints. Secure the counterflashing with roofing nails spaced 6-inches on center. Strip in the counterflashing with strips of eaves flashing.

3.11 MISCELLANEOUS INSTALLATION

A. Install new prefinished seamless aluminum gutters at perimeter edges of low slope roof areas as shown on the Roof Plan. Secure and seal the joints between gutter sections and fabricated corners, outlet tubes and end caps using pop rivets and the specified sealant. Secure the gutter to the fascia with heavy duty hidden gutter hangers spaced 30-inches on center. Positively slope the gutters to drain.

B. Install new downspouts at the existing downspout locations. Install downspouts to discharge into existing below grade drain pipes. Secure all joints with pop rivets or screws. Install two downspout straps minimum per downspout using appropriate fasteners to secure the downspout straps to walls.

C. Install new walkway pads at the locations shown on the Roof Plan. Secure the walkway pads to the membrane in accordance with the roofing manufacturer's instructions.

3.12 PRECAUTIONS

A. Do not use oil base or plastic roof cement in conjunction with EPDM materials.

B. Waste products (petroleum, grease, oil and solvents - vegetable or mineral oil and animal fat - direct contact with steam venting) should not be allowed to come in contact with the EPDM roof membrane system.

C. Splicing and bonding surface must be dry.

D. Daily Seal: Care should be exercised to ensure that water does not flow beneath any completed sections of roof by temporarily sealing the loose edge of the membrane when the weather is threatening. The manufacturer's requirements should be followed closely.

E. An open flame may not be used to dry the roof membrane or to heat the flashing materials.

3.13 CLEANING

A. Remove adhesives, soil or other markings from finished surfaces.

B. In areas where finished surfaces are soiled by work of this section, consult manufacturer of surfaces for cleaning advice and comply with their documented instructions.

C. Repair or replace defaced or damaged finishes caused by work of this section.

D. The Roofing Contractor will be responsible for cleaning the building interior of any reroofing related debris entering the building as a result of deck repair and reroofing operations.

3.14 PROTECTION

A. Protect installed roofing and flashings from construction operations.

B. Where traffic must continue over finished roof membrane, protect surfaces using rigid insulation and plywood.

END OF SECTION

SECTION 07 6200
SHEET METAL FLASHING AND TRIM

PART 1 GENERAL

1.01 RELATED DOCUIMENTS

A. This Section is part of the entire set of Contract Documents and shall be coordinated with the applicable provision of the other parts.

1.02 SECTION INCLUDES

A. Drip edge, counterflashing and miscellaneous flashing for low-slope roofing.

1.03 RELATED REQUIREMENTS

A. Section 075300 - Elastomeric Membrane Roofing.

1.04 REFERENCE STANDARDS

A. ASTM A653/A653M - Standard Specification for Steel Sheet, Zinc-Coated (Galvanized) or Zinc-Iron Alloy-Coated (Galvannealed) by the Hot-Dip Process 2020.

B. SMACNA (ASMM) - Architectural Sheet Metal Manual 2012.

1.05 SUBMITTALS

A. Shop Drawings: Indicate material profile, jointing pattern, jointing details, fastening methods, flashings, terminations, and installation details.

B. Samples: Submit selection and verification samples for finishes, colors and textures. Color to be selected by the Owner.

1.06 QUALITY ASSURANCE

A. Perform work in accordance with SMACNA (ASMM) requirements and standard details, except as otherwise indicated.

B. Fabricator and Installer Qualifications: Company specializing in sheet metal work with 5 years of documented experience. Engage an experienced installer who has completed sheet metal flashing and trim work similar in material, design and extent to that indicated for this Project and with a record of successful in-service performance.

1.07 DELIVERY, STORAGE, AND HANDLING

A. Stack material to prevent twisting, bending, and abrasion, and to provide ventilation. Slope metal sheets to ensure drainage.

B. Prevent contact with materials that could cause discoloration or staining.

C. Do not expose to direct sunlight or extreme heat trim material with factory applied strippable film.

PART 2 PRODUCTS

2.01 SHEET METAL FLASHING AND TRIM

A. Sheet Materials
   1. Galvanized Steel for Continuous Cleat: ASTM A 653, with G90 zinc coating; minimum 0.034 inch (22 gauge) thick base metal.
   2. Galvanized Steel Base Metal: ASTM A653/A653M, with G90/Z275 zinc coating; minimum 24-gauge, 0.0239-inch (0.61 mm) thick base metal.

B. Prefinished Galvanized Steel: ASTM A653/A653M, with G90/Z275 zinc coating; minimum 24-gauge, 0.0239-inch (0.61 mm) thick base metal, shop pre-coated with PVDF coating.
   1. Fluoropolymer Coating: High performance organic powder coating, AAMA 2604; multiple coat, thermally cured fluoropolymer finish system.
   2. Color: As selected by Owner from manufacturer's standard colors.
   3. Acceptable Manufacturer's:
      a. Holcim Elevate: Una-Clad

b. Petersen Aluminum Corporation: Pac-Clad

C. Accessories
1. Fasteners: Same metal as sheet metal flashing or other noncorrosive metal as recommended by sheet metal manufacturer.
2. Gasketed washers: Soft neoprene washers.
3. Elastomeric Sealant: High performance, one component polyurethane-base, non-sag elastomeric sealant as manufactured by one of the following manufacturers or approved equivalents:
   a. Sika Corporation, Sikaflex - 1a
   b. Tremco, Vulkem 116

D. Fabrication, General
1. Sheet Metal Fabrication Standard: Fabricate sheet metal flashing and trim to comply with recommendations of SMACNA's "Architectural Sheet Metal Manual" that apply to the design, dimensions, metal and other characteristics of the item indicated.
2. Comply with details shown to fabricate sheet metal flashing and trim that fit substrates and result in waterproof and weather-resistant performance once installed. Verify shapes and dimensions of surfaces to be covered before fabricating sheet metal.
3. Form material with watertight end joints and seams.
4. Fabricate vertical faces with bottom edge hemmed 1/2-inch and bent outward to form a drip edge unless specified otherwise.
5. Form exposed sheet metal work, shop fabricated or field fabricated, that is without excessive oil canning, buckling, and tool marks and that is true to line and levels indicated.
6. Sealed Joints: Form non-expansion, but movable, joints in metal to accommodate elastomeric sealant to comply with SMACNA standards.
7. Conceal fasteners and expansion provision where possible. Exposed fasteners are not allowed on faces of sheet metal exposed to public view.
8. Corners: corners must be formed, mitered, lapped, notched, sealed or soldered as necessary to provide a continuous system that is not more susceptible to leaks than straight sections.

E. Fabrication, Sheet Metal
1. General: Fabricate sheet metal items in thickness or weight needed to comply with performance requirements but not less than that listed below for each application and metal.
2. Drip Edge: Fabricate from the following material:
   a. Prefinished Galvanized Steel: 0.0276 inch (24 gauge) thick.
   b. Fabricate the drip edge in accordance with SMACNA Figure 2-5C. Face dimension in accordance with RTA Details and a 1/2-inch hemmed drip edge along the bottom edge. Fabricate the eaves edge drip edge with no gravel stop. Faricate the rake edge drip edge with a one-inch tall gravel stop. Nailing flange dimensions: 4-inches minimum. See RTA Detail Nos. 10 and 12.
3. Counterflashing: Fabricate from the following material:
   a. Prefinished Galvanized Steel: 0.0276 inch (24 gauge) thick.
   b. Fabricate the receiver mounted counterflashing in accordance with SMACNA Figure 4-5B. Fabricate the counterflashing with a hemmed drip edge along the bottom edge and a minimum face of 4-inches. The top edge to receive behind the receiver or as shown in RTA Details, 1-inch minimum. See RTA Detail No. 11.
   c. Counterflashing at the shingle transition shall be fabricated with a 5-inch face and a 1/2-inch hemmed drip edge along the bottom edge. See RTA Detail No. 6.

PART 3 EXECUTION

3.01 EXAMINATION

A. Verify roof openings, curbs, pipes, sleeves, ducts, and vents through roof are solidly set, reglets in place, and nailing strips located.

B. Verify roofing termination and base flashings are in place, sealed, and secure.

3.02 INSTALLATION

A. Unless otherwise indicated, install sheet metal flashing and trim to comply with performance requirements, manufacturer's installation instructions and SMACNA's "Architectural Sheet Metal Manual". Anchor units of work securely in place by methods indicated, providing for thermal expansion of metal units; conceal fasteners where possible, and set units true to line and level as indicated. Install work with laps, joints, and seams that will be permanently watertight and weatherproof.

B. Expansion Provisions: Provide for thermal expansion of exposed sheet metal work. Space movement joints at maximum of 10 feet with no joints allowed within 24 inches of corner of intersection.

C. Drip Edge
   1. Install drip edge on the perimeter edges shown in RTA Details. Secure the drip edge flange with nails spaced 4-inches on center. Seal the flange in accordance with the manufacturer's requirements.

D. Counterflashing
   1. Install the counterflashing into existing receivers. Notch and lap the end joints in the counterflashing 4-inches. Secure the counterflashing to the receiver with stainless steel pop rivets spaced 24-inches on center.

E. Shingle Transition Flashing
   1. See Section 07 5300 - Elastomeric Membrane Roofing for installation.

3.03 FIELD QUALITY CONTROL

A. Inspection will involve surveillance of work during installation to ascertain compliance with specified requirements.

3.04 CLEANING

A. Remove bituminous markings from finished surfaces.

B. In areas where finished surfaces are soiled by work of this section, consult manufacturer of surfaces for cleaning advice and conform to their documented instructions.

C. Repair or replace defaced or damaged finishes caused by work of this section.

END OF SECTION

APPENDIX

Roof Plan ..... Plate 1
Eaves Edge ..... Detail 1
Rake Edge ..... Detail 2
Step Flashing ..... Detail 3
Valley Flashing ..... Detail 4
Ridge Vent ..... Detail 5
Shingle Transition ..... Detail 6
Backer Flashing ..... Detail 7
Apron Flashing ..... Detail 8
Step Flashing ..... Detail 9
Perimeter Edge ..... Detail 10
Wall Flashing ..... Detail 11
Perimeter Edge ..... Detail 12
Perimeter Edge ..... Detail 13
Apron Flashing ..... Detail 14
Ridge Cap ..... Detail 15
Eaves Edge ..... Detail 16
Shingle Over Intake Vent ..... Detail 17
Step Flashing ..... Detail 18
Apron Flashing ..... Detail 19
Apron Flashing ..... Detail 20

Architectural Sheet Metal Manual – Sheet Metal and Air Conditioning Contractors National Association, Inc., Seventh Edition, 2012.

Gutter Connections ..... Figure 1-33B

Downspout Connections ..... Figure 1-35G

Formed Gravel Stop/Fascia – Joint Systems ..... Figure 2-5C

Counterflashing Systems - Installation ..... Figure 4-5B

Base and Counterflashing Systems - Installation ..... Figure 4-8A and C

Chimney Flashing ..... Figure 4-14

NRCA Roofing and Waterproofing Manual – National Roofing Contractors Association, Fifth Edition, 2003 Update

3.2.1 Underlayment Configuration ..... Figure 2

3.6.3.2 Closed Cut Valleys ..... Figure 15

3.6.4.1 Vertical Surfaces ..... Figures 17

3.6.4.1 Apron Flashings ..... Figures 18

3.6.4.2 Step Flashings ..... Figures 19, 20 and 21

NRCA Roofing and Waterproofing Manual – Construction Details - National Roofing Contractors Association, Fifth Edition, 2003 Update.

Backer Flashing ASPH-3

Pipe Penetration ASPH-8

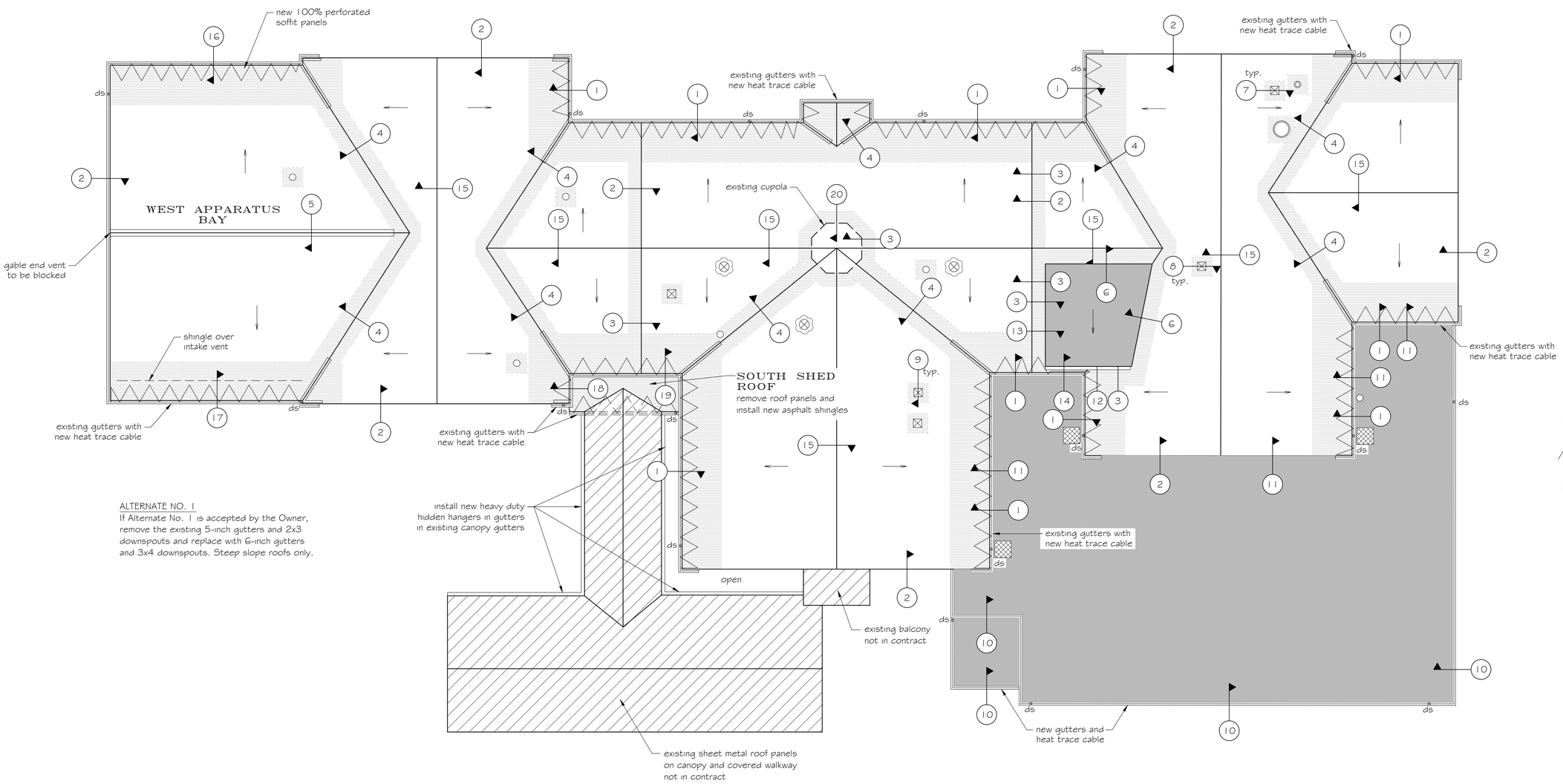

ALTERNATE NO. 1

If Alternate No. 1 is accepted by the Owner, remove the existing 5-inch gutters and 2x3 downspouts and replace with 6-inch gutters and 3x4 downspouts. Steep slope roofs only.

north

0 8 16

scale in feet

LEGEND:

- mechanical unit
- round penetration
- hot vent stack
- walkway pads
- obsolete power vent
- not in contract
- eaves flashing
- EPDM membrane
- roof slope
- gutter and downspout
- heat trace cable
- ridge vent
- RTA detail

GENERAL NOTES:

1. All areas and dimensions shown are approximate and based upon rough field measurements taken by representatives of Roofing Technology Associates, Ltd.

2. This drawing should not be used for bidding or estimating purposes. Contractors are responsible for their own field measurements, quantities and verification of conditions shown.

rta

ROOFING TECHNOLOGY ASSOCIATES, LTD.
38031 SCHOOLCRAFT ROAD
LIVONIA, MICHIGAN 48150-1065
(734) 591-4444

ROOF PLAN

NORTHVILLE CITY HALL
215 WEST MAIN STREET
NORTHVILLE, MICHIGAN

Project No:	Drawn By:	Plate No:
23-065	RDK	1
Date: 10-27-23	Checked By: RDK	

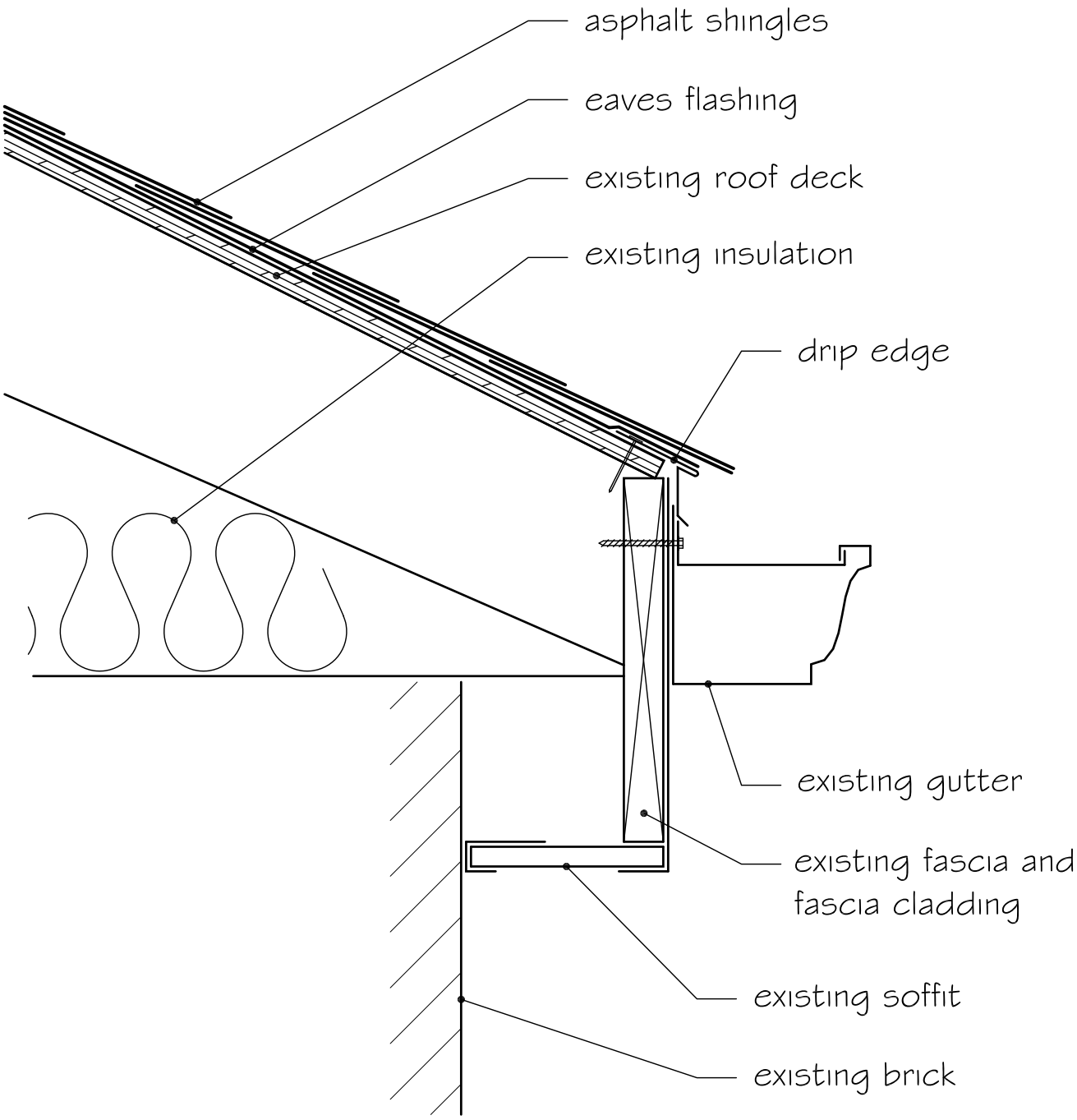

EAVES EDGE

not to scale

NOTE: components shown are new unless noted as existing

ROOFING TECHNOLOGY ASSOCIATES, LTD.
38031 SCHOOLCRAFT ROAD
LIVONIA, MICHIGAN 48150-1065
(734) 591-4444

NORTHVILLE CITY HALL
215 WEST MAIN STREET
NORTHVILLE, MICHIGAN

Project No:	Drawn By:	Detail No:
23-065	RDK	1
Date: 11-7-23	Checked By: RDK	

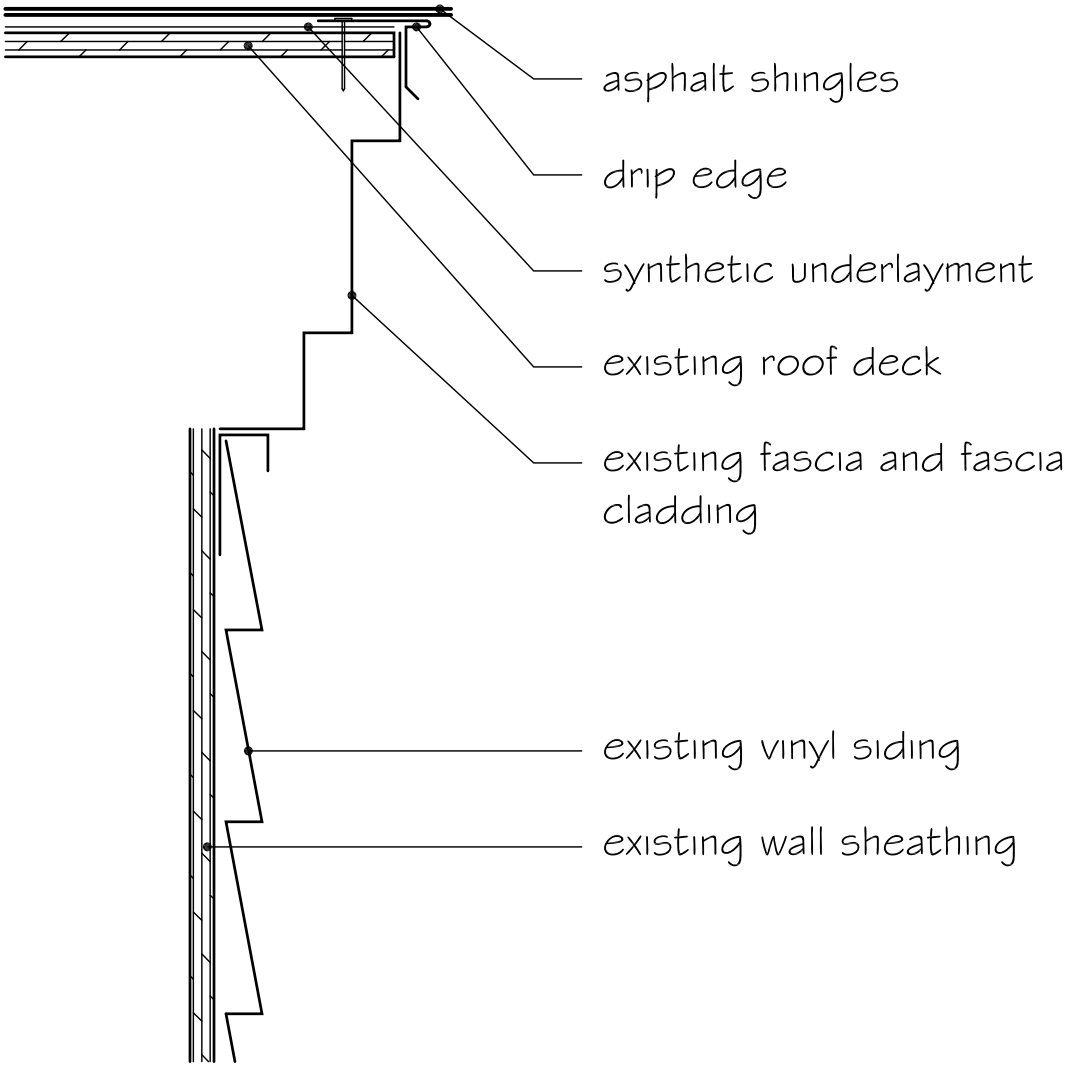

RAKE EDGE

not to scale

NOTE: components shown are new unless noted as existing

ROOFING TECHNOLOGY ASSOCIATES, LTD.
38031 SCHOOLCRAFT ROAD
LIVONIA, MICHIGAN 48150-1065
(734) 591-4444

NORTHVILLE CITY HALL
215 WEST MAIN STREET
NORTHVILLE, MICHIGAN

Project No:	Drawn By:	Detail No:
23-065	APW	2
Date: 11-7-23	Checked By: RDK	

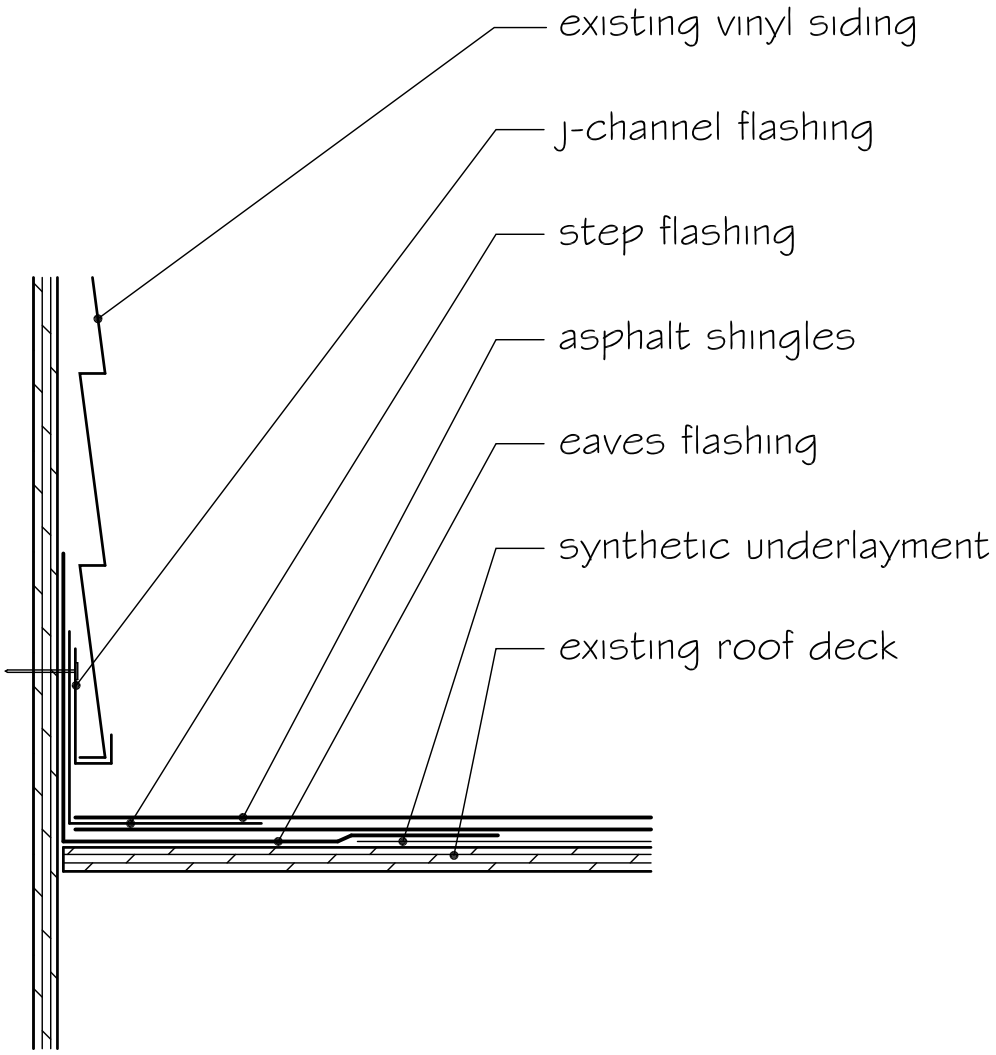

STEP FLASHING

not to scale

NOTE: components shown are new unless noted as existing

ROOFING TECHNOLOGY ASSOCIATES, LTD.
38031 SCHOOLCRAFT ROAD
LIVONIA, MICHIGAN 48150-1065
(734) 591-4444

NORTHVILLE CITY HALL
215 WEST MAIN STREET
NORTHVILLE, MICHIGAN

Project No:	Drawn By:	Detail No:
23-065	APW	3
Date: 11-7-23	Checked By: RDK	

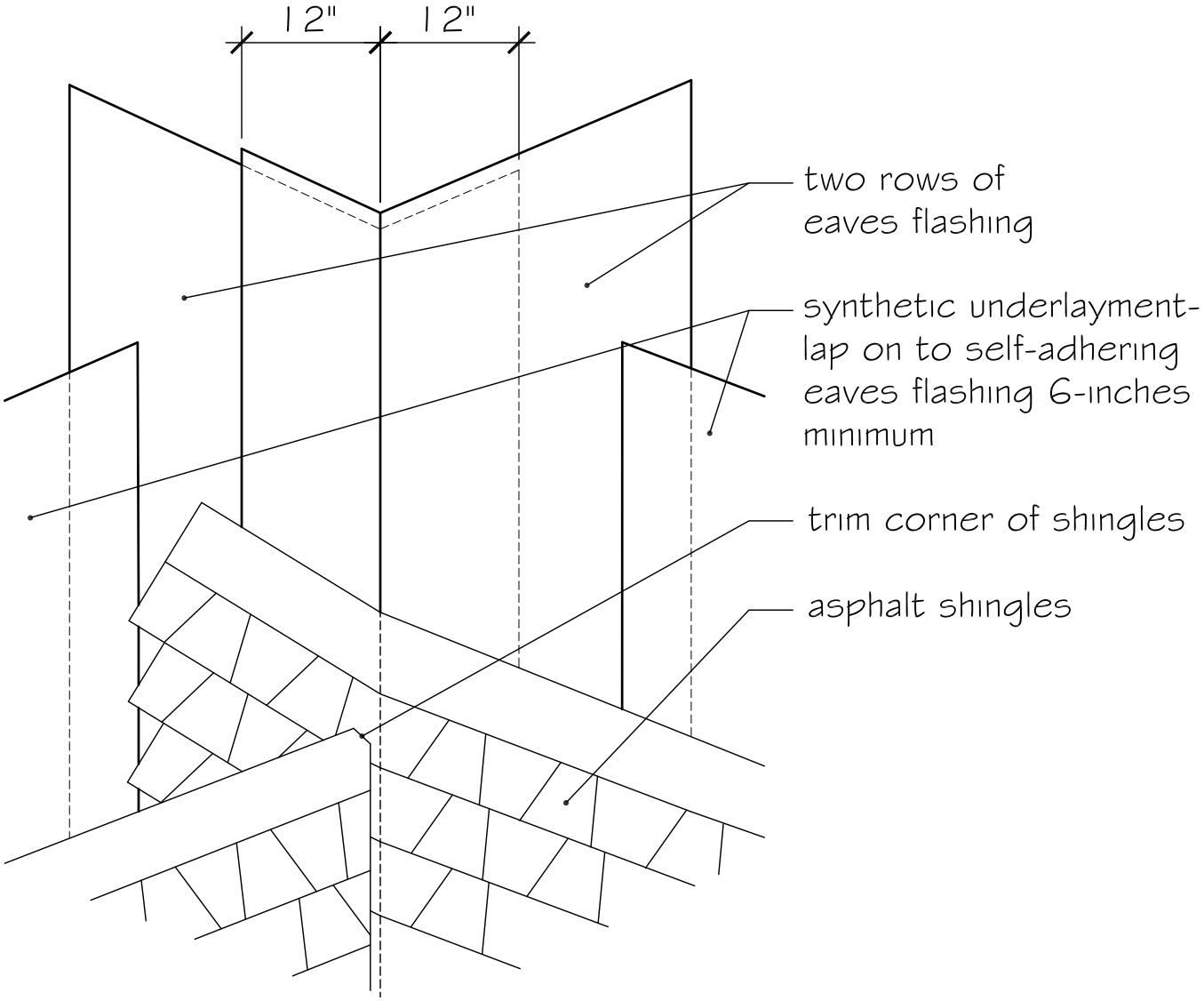

VALLEY FLASHING

not to scale

NOTE: components shown are new unless noted as existing

rta

ROOFING TECHNOLOGY ASSOCIATES, LTD.
38031 SCHOOLCRAFT ROAD
LIVONIA, MICHIGAN 48150-1065
(734) 591-4444

NORTHVILLE CITY HALL
215 WEST MAIN STREET
NORTHVILLE, MICHIGAN

Project No:	Drawn By:	Detail No:
23-065	RDK	4
Date: 11-7-23	Checked By: RDK	

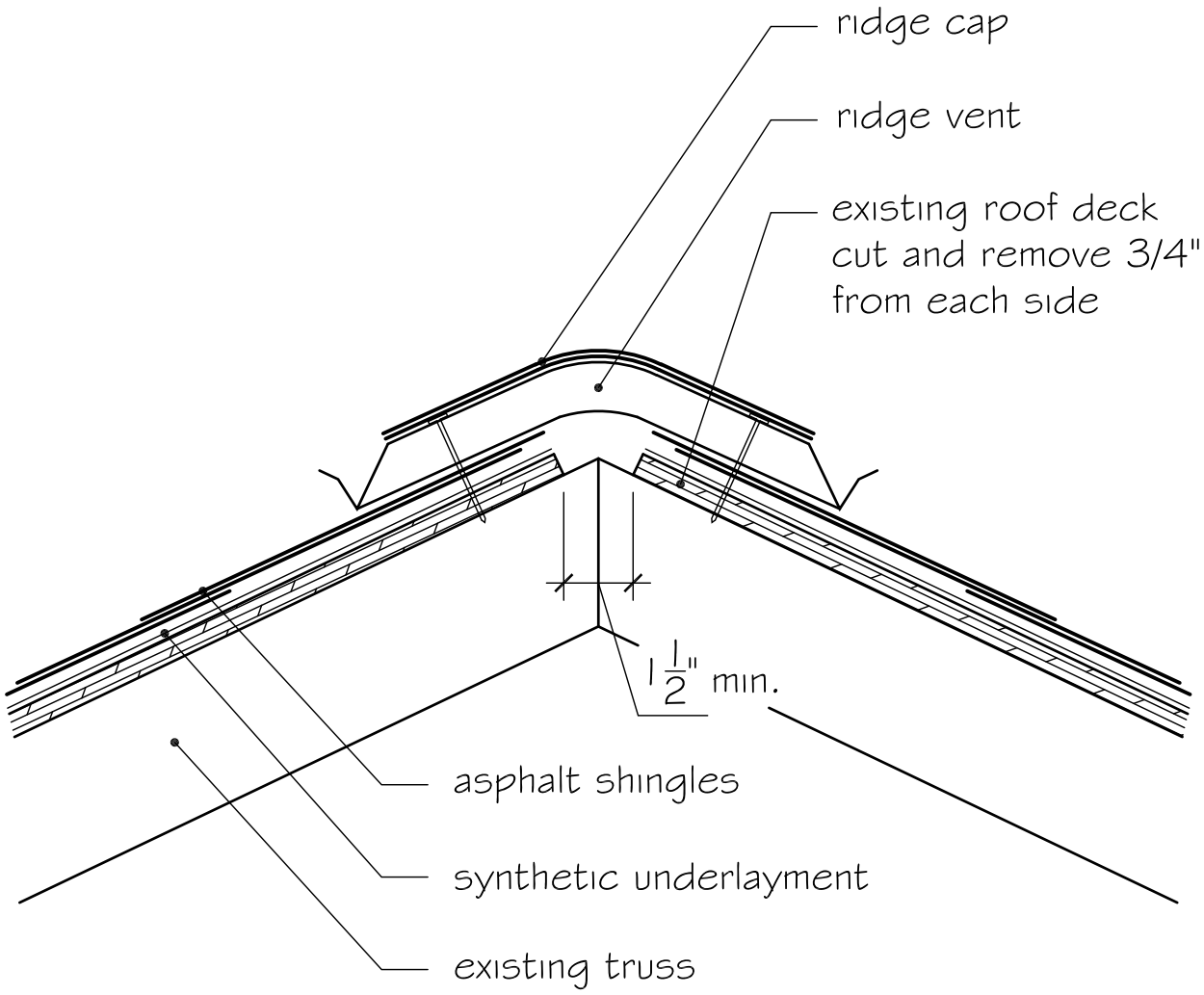

RIDGE VENT

not to scale

NOTE: components shown are new unless noted as existing

ROOFING TECHNOLOGY ASSOCIATES, LTD.
38031 SCHOOLCRAFT ROAD
LIVONIA, MICHIGAN 48150-1065
(734) 591-4444

NORTHVILLE CITY HALL
215 WEST MAIN STREET
NORTHVILLE, MICHIGAN

Project No:	Drawn By:	Detail No:
23-065	RDK	5
Date: 11-7-23	Checked By: RDK	

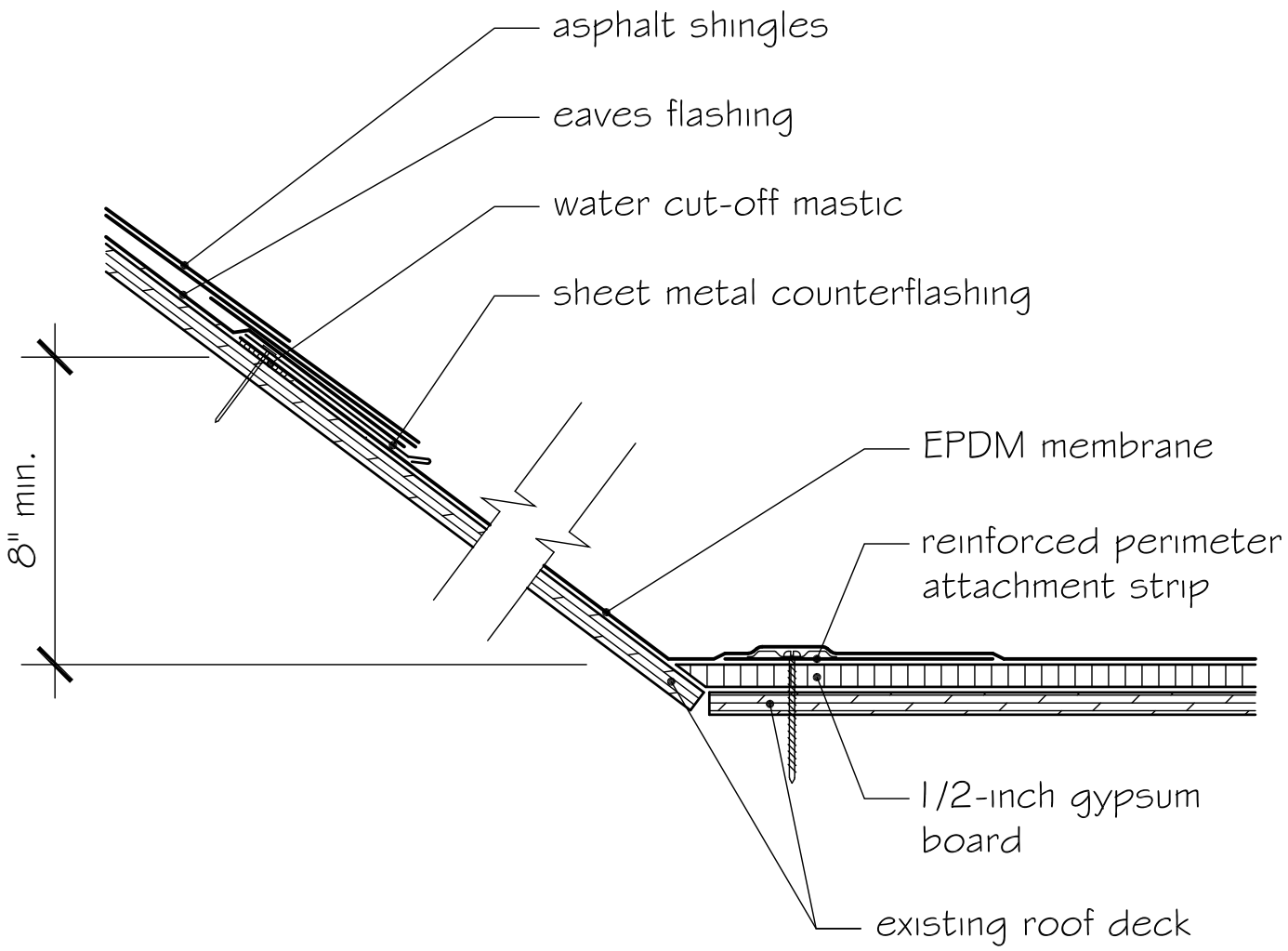

SHINGLE TRANSITION

not to scale

NOTE: components shown are new unless noted as existing

ROOFING TECHNOLOGY ASSOCIATES, LTD.
38031 SCHOOLCRAFT ROAD
LIVONIA, MICHIGAN 48150-1065
(734) 591-4444

NORTHVILLE CITY HALL
215 WEST MAIN STREET
NORTHVILLE, MICHIGAN

Project No:	Drawn By:	Detail No:
23-065	RDK	6
Date: 11-7-23	Checked By: RDK	

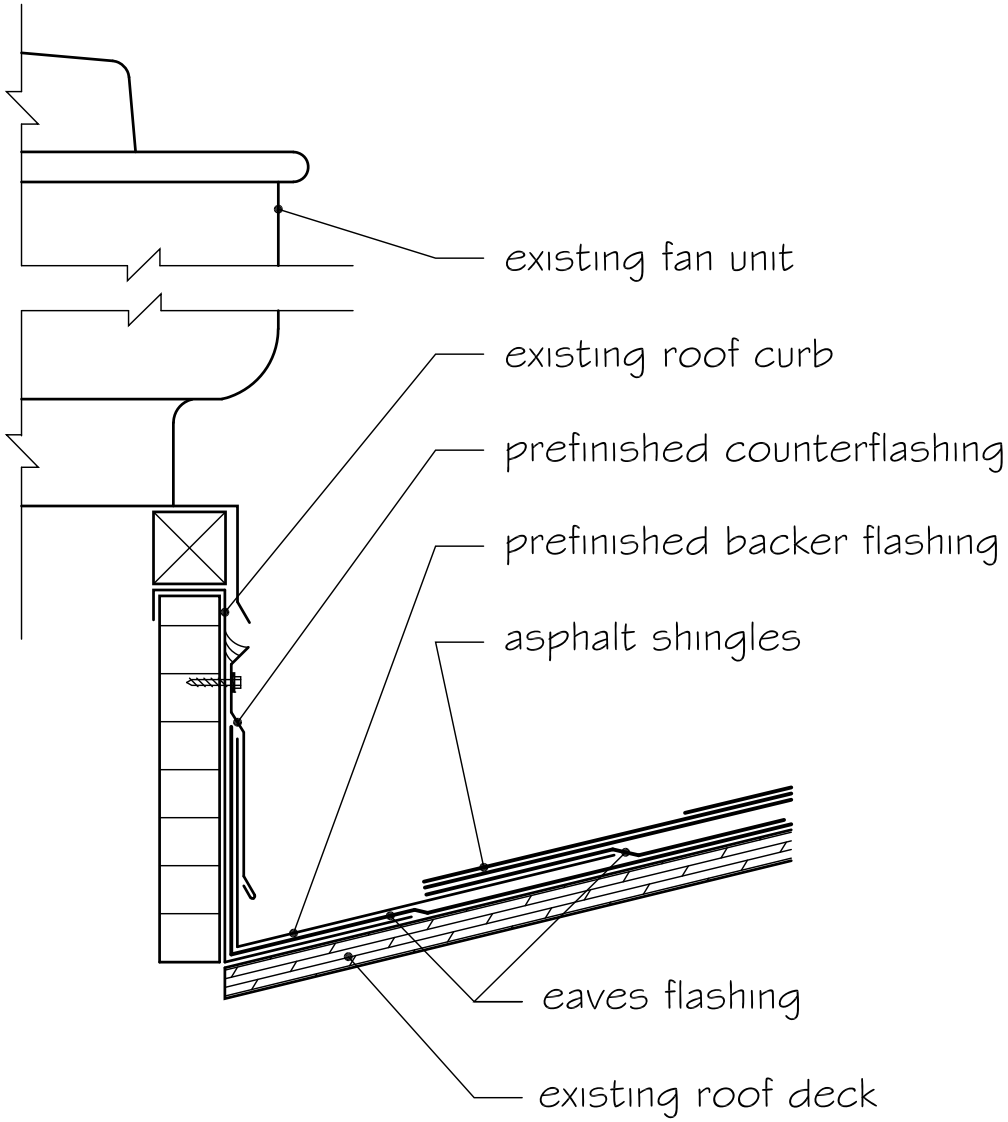

BACKER FLASHING

not to scale

NOTE: components shown are new unless noted as existing

ROOFING TECHNOLOGY ASSOCIATES, LTD.
38031 SCHOOLCRAFT ROAD
LIVONIA, MICHIGAN 48150-1065
(734) 591-4444

NORTHVILLE CITY HALL
215 WEST MAIN STREET
NORTHVILLE, MICHIGAN

Project No:	Drawn By:	Detail No:
23-065	APW	7
Date: 11-28-23	Checked By: RDK	

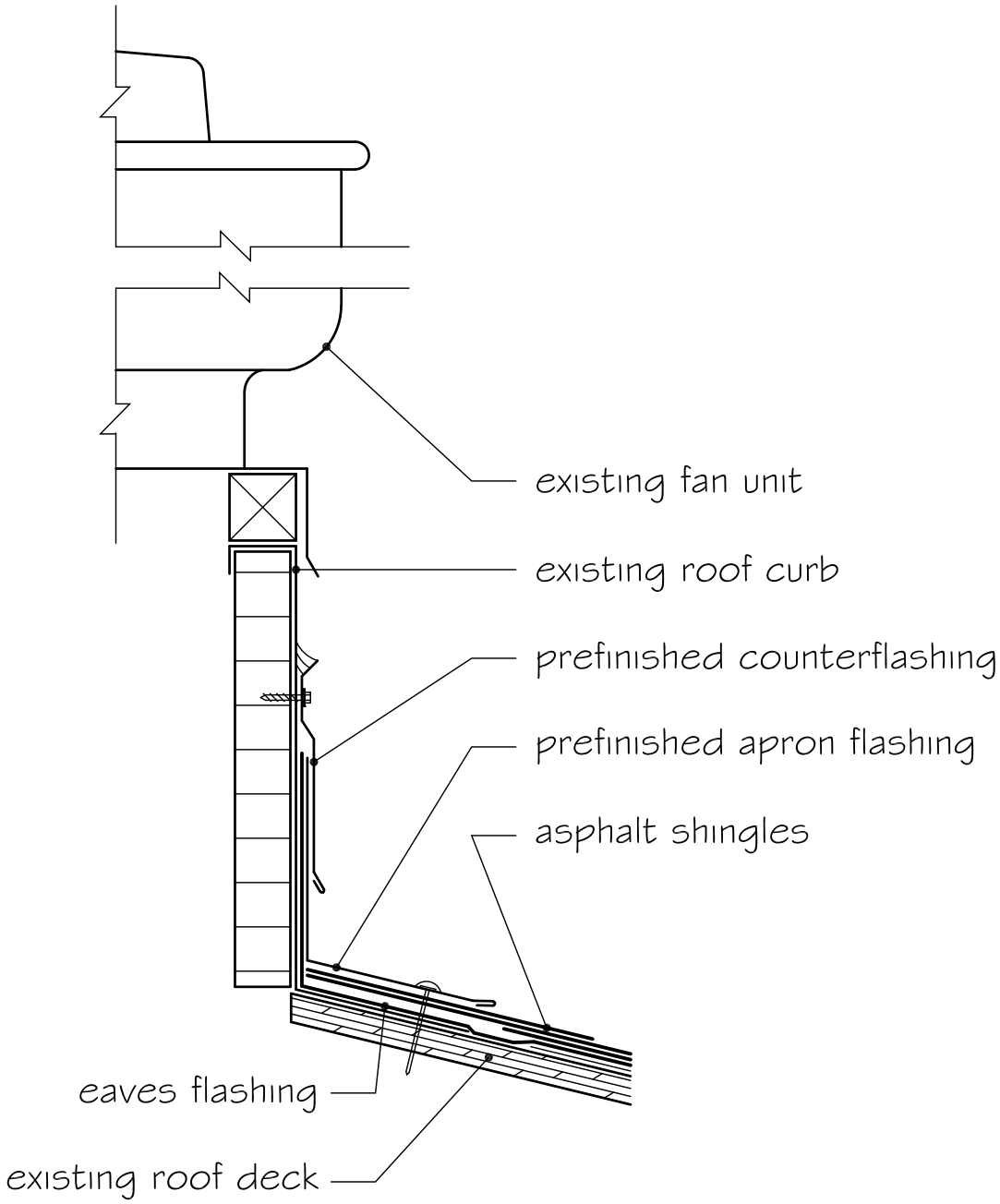

APRON FLASHING

not to scale

NOTE: components shown are new unless noted as existing

ROOFING TECHNOLOGY ASSOCIATES, LTD.
38031 SCHOOLCRAFT ROAD
LIVONIA, MICHIGAN 48150-1065
(734) 591-4444

NORTHVILLE CITY HALL
215 WEST MAIN STREET
NORTHVILLE, MICHIGAN

Project No:	Drawn By:	Detail No:
23-065	APW	8
Date: 11-28-23	Checked By: RDK	

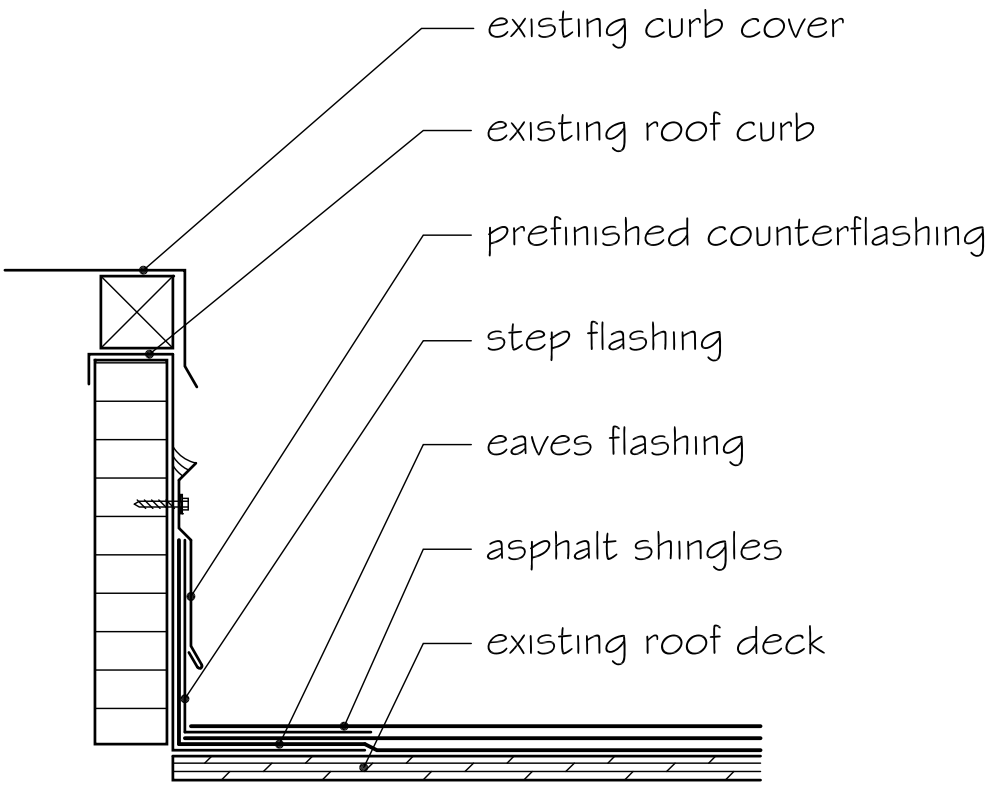

STEP FLASHING

not to scale

NOTE: components shown are new unless noted as existing

ROOFING TECHNOLOGY ASSOCIATES, LTD.
38031 SCHOOLCRAFT ROAD
LIVONIA, MICHIGAN 48150-1065
(734) 591-4444

NORTHVILLE CITY HALL
215 WEST MAIN STREET
NORTHVILLE, MICHIGAN

Project No:	Drawn By:	Detail No:
23-065	APW	9
Date: 11-28-23	Checked By: RDK	

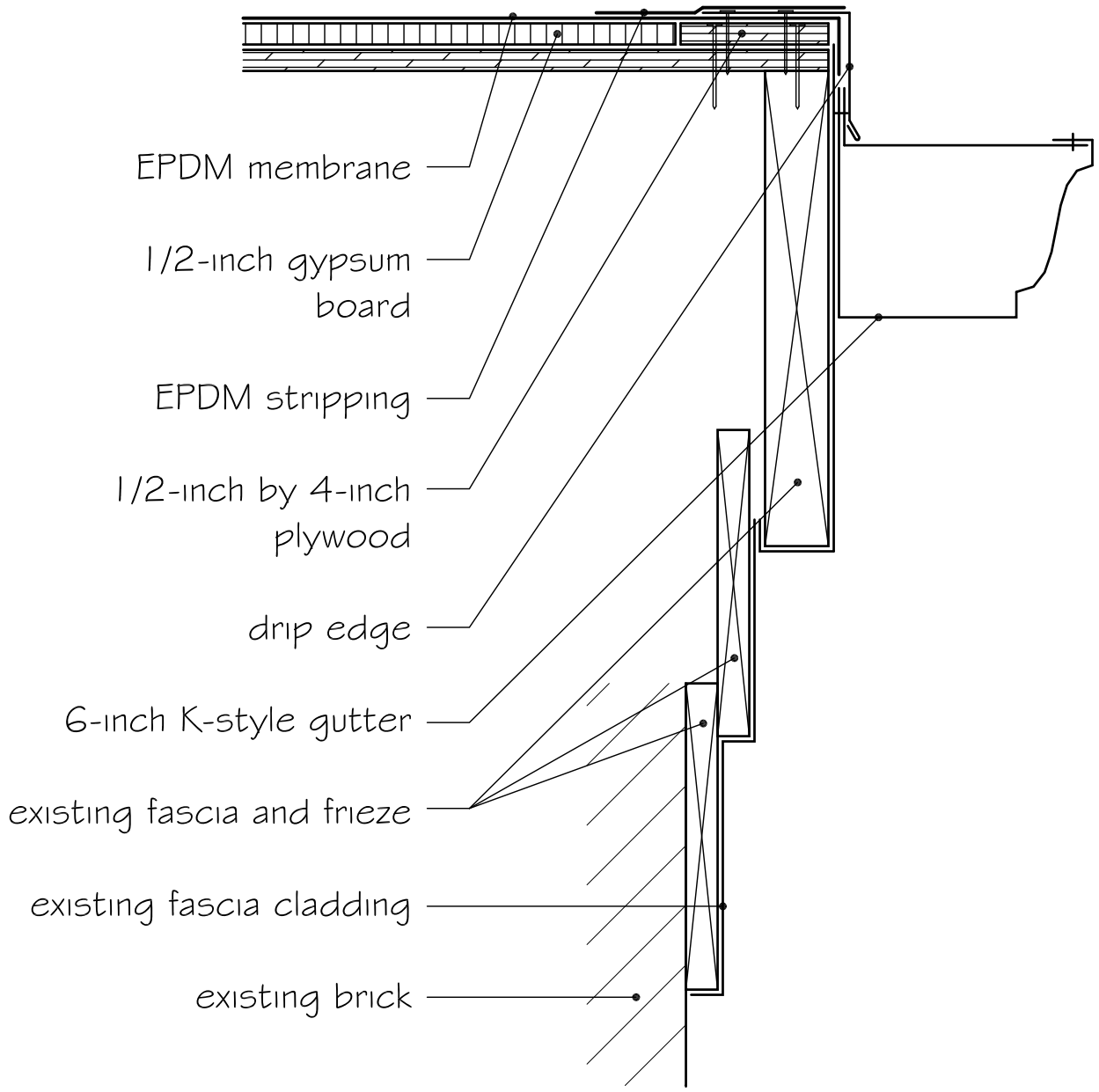

PERIMETER EDGE

not to scale

NOTE: components shown are new unless noted as existing

rta
ROOFING TECHNOLOGY ASSOCIATES, LTD.
38031 SCHOOLCRAFT ROAD
LIVONIA, MICHIGAN 48150-1065
(734) 591-4444

NORTHVILLE CITY HALL
215 WEST MAIN STREET
NORTHVILLE, MICHIGAN

Project No:	Drawn By:	Detail No:
23-065	RDK	10
Date: 11-7-23	Checked By: RDK	

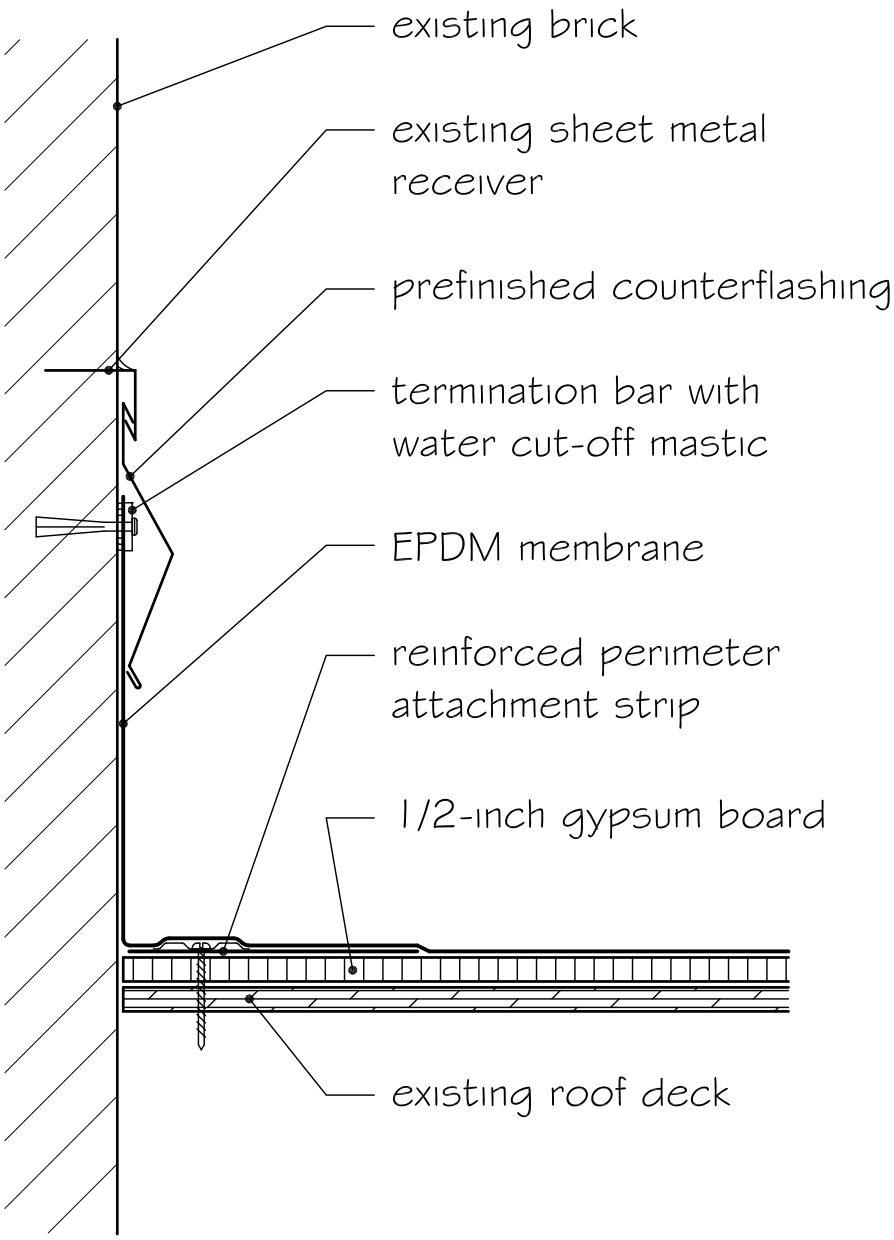

WALL FLASHING

not to scale

NOTE: components shown are new unless noted as existing

ROOFING TECHNOLOGY ASSOCIATES, LTD.
38031 SCHOOLCRAFT ROAD
LIVONIA, MICHIGAN 48150-1065
(734) 591-4444

NORTHVILLE CITY HALL
215 WEST MAIN STREET
NORTHVILLE, MICHIGAN

Project No:	Drawn By:	Detail No:
23-065	RDK	11
Date: 11-7-23	Checked By: RDK	

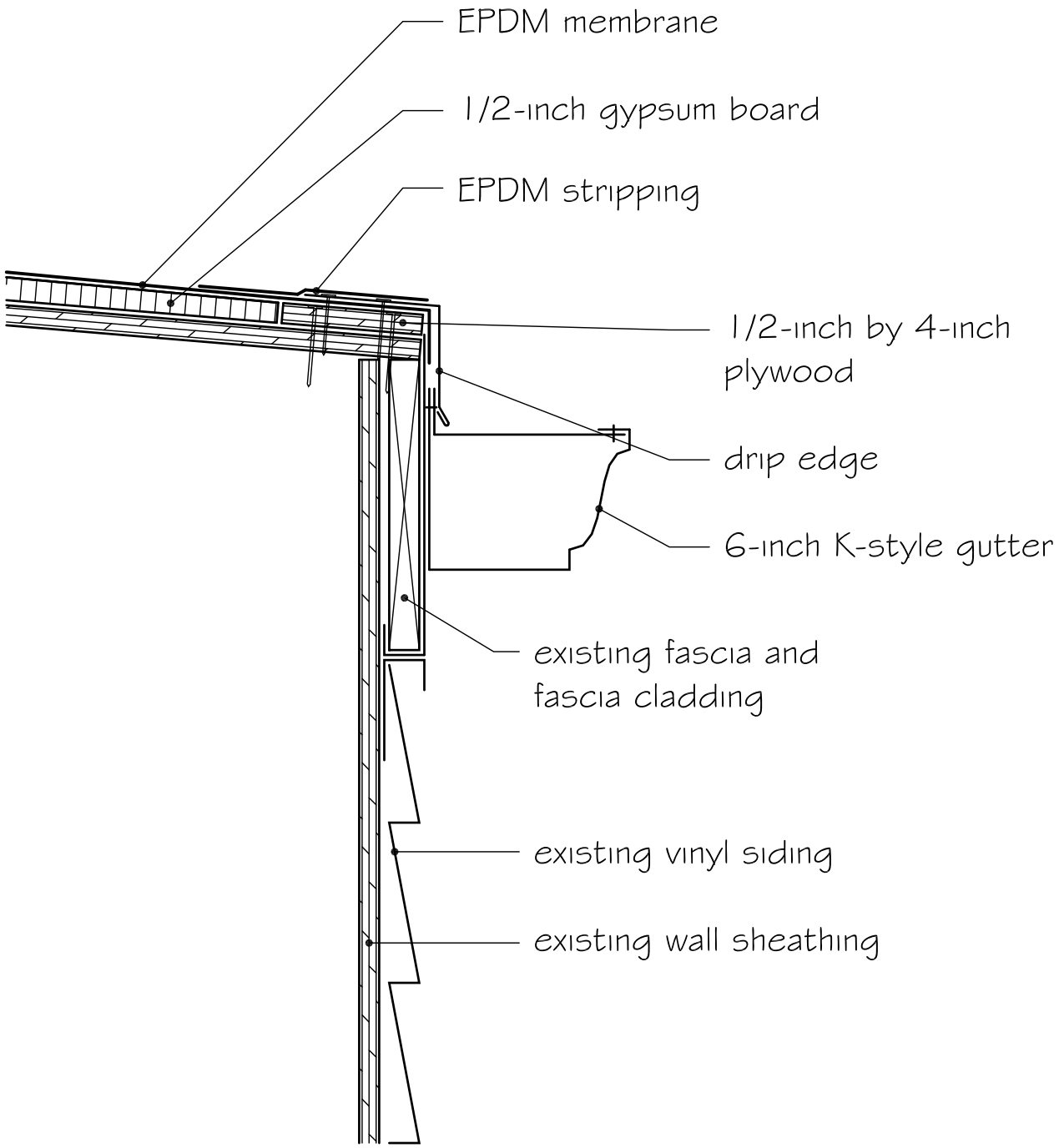

PERIMETER EDGE

not to scale

NOTE: components shown are new unless noted as existing

rta
ROOFING TECHNOLOGY ASSOCIATES, LTD.
38031 SCHOOLCRAFT ROAD
LIVONIA, MICHIGAN 48150-1065
(734) 591-4444

NORTHVILLE CITY HALL
215 WEST MAIN STREET
NORTHVILLE, MICHIGAN

Project No:	Drawn By:	Detail No:
23-065	RDK	12
Date: 11-7-23	Checked By: RDK	

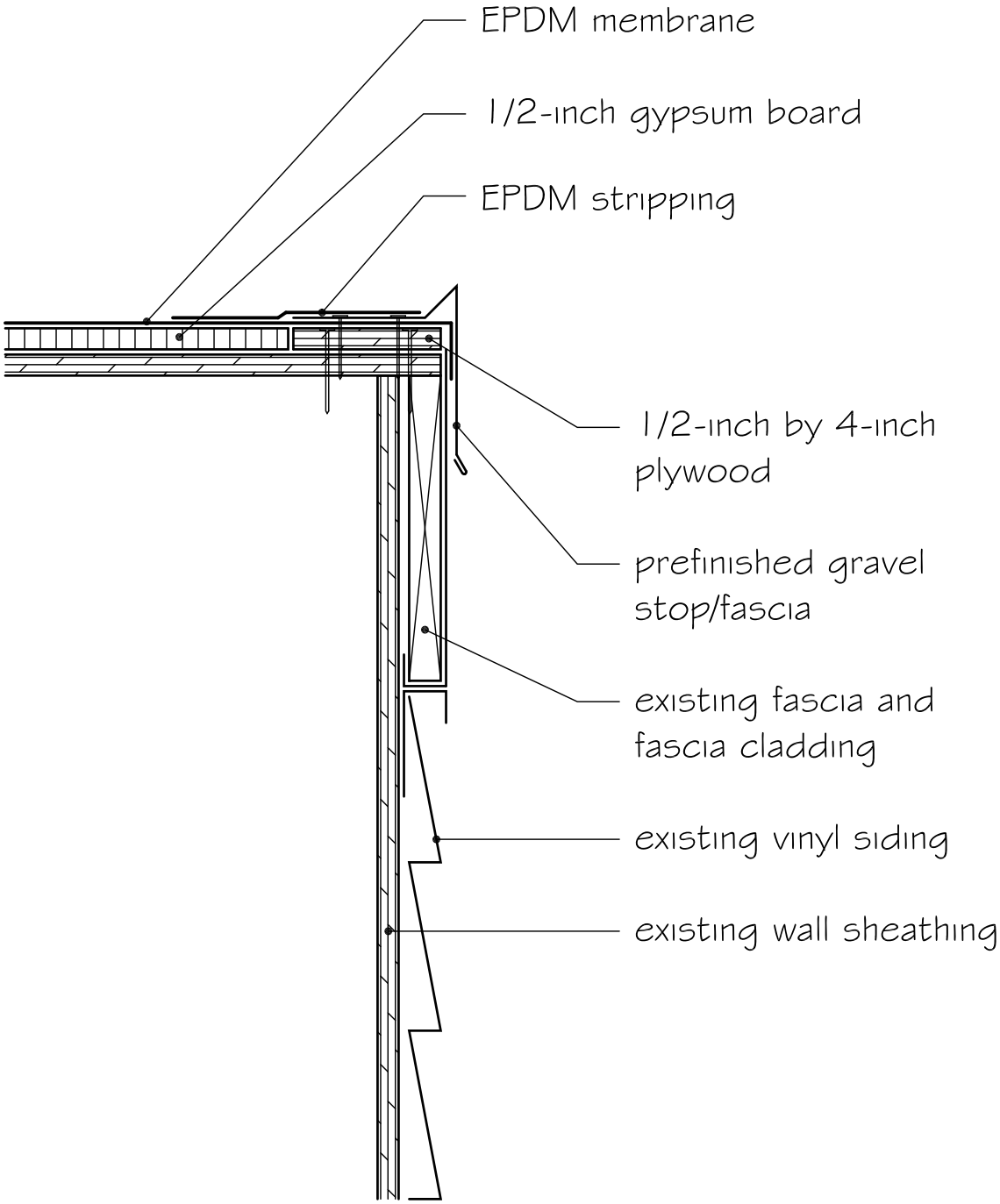

PERIMETER EDGE

not to scale

NOTE: components shown are new unless noted as existing

ROOFING TECHNOLOGY ASSOCIATES, LTD.
38031 SCHOOLCRAFT ROAD
LIVONIA, MICHIGAN 48150-1065
(734) 591-4444

NORTHVILLE CITY HALL
215 WEST MAIN STREET
NORTHVILLE, MICHIGAN

Project No:	Drawn By:	Detail No:
23-065	APW	13
Date: 11-7-23	Checked By: RDK	

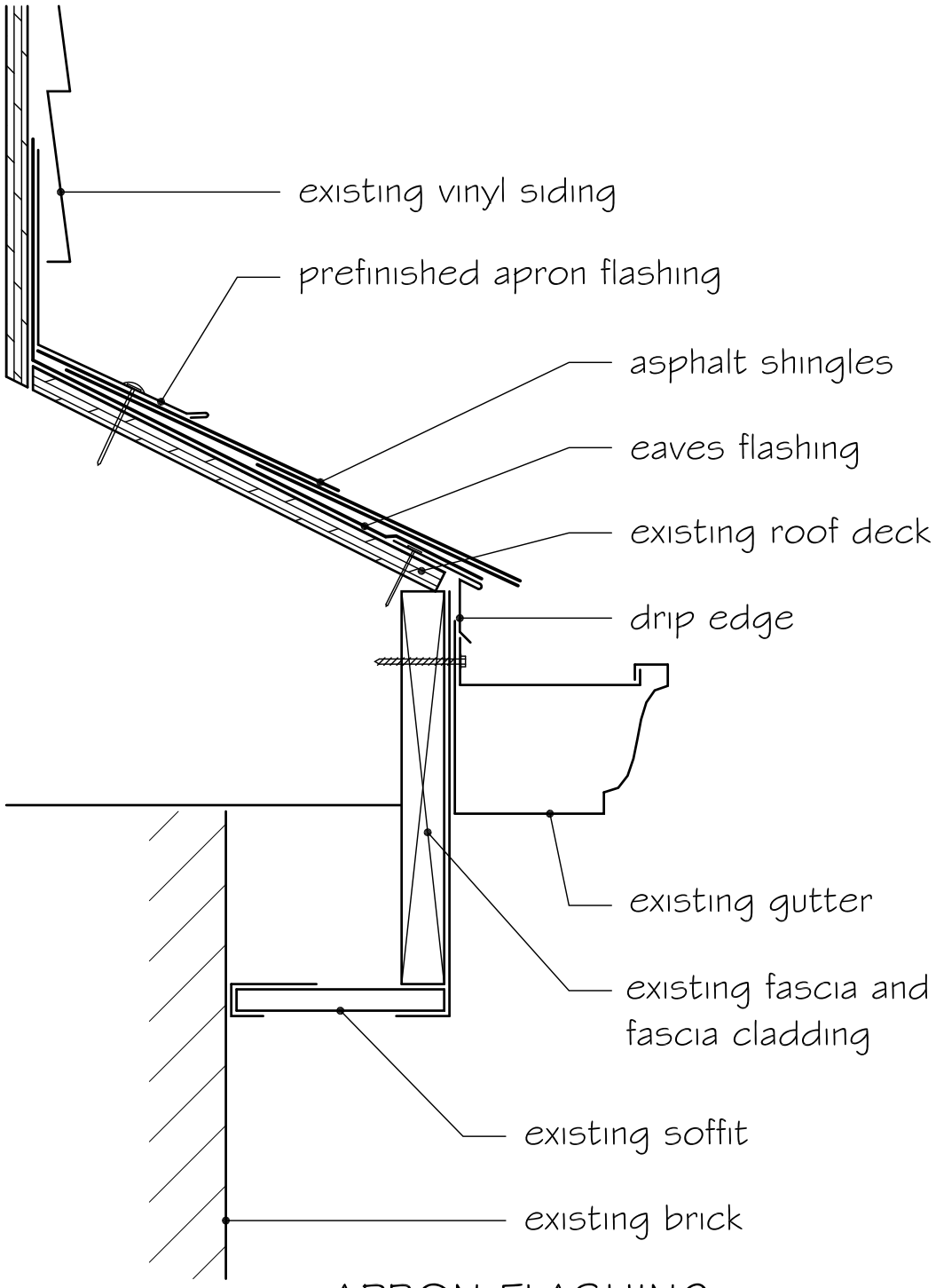

APRON FLASHING

not to scale

NOTE: components shown are new unless noted as existing

ROOFING TECHNOLOGY ASSOCIATES, LTD.
38031 SCHOOLCRAFT ROAD
LIVONIA, MICHIGAN 48150-1065
(734) 591-4444

NORTHVILLE CITY HALL
215 WEST MAIN STREET
NORTHVILLE, MICHIGAN

Project No:	Drawn By:	Detail No:
23-065	APW	14
Date: 11-28-23	Checked By: RDK	

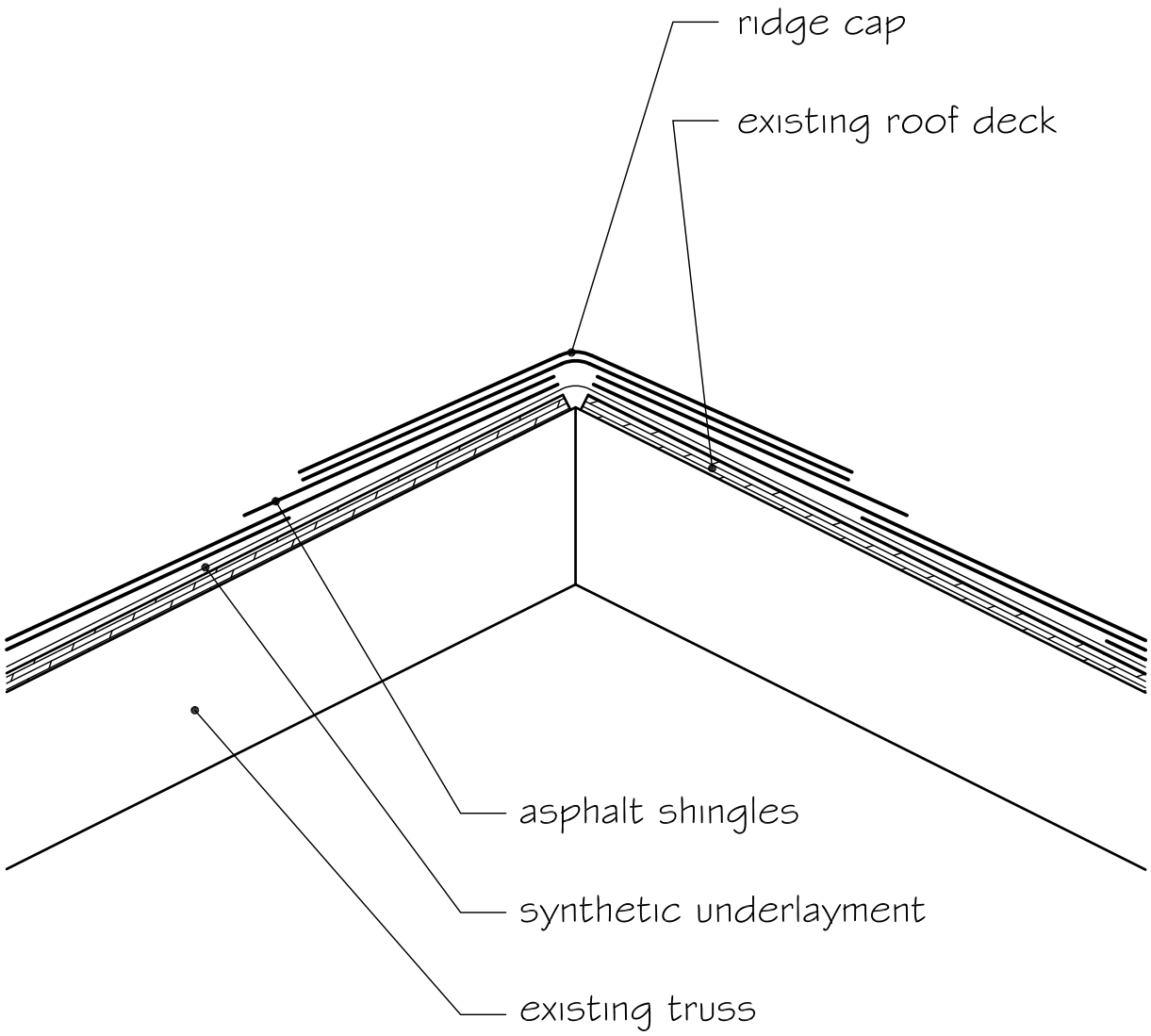

RIDGE CAP

not to scale

NOTE: components shown are new unless noted as existing

ROOFING TECHNOLOGY ASSOCIATES, LTD.
38031 SCHOOLCRAFT ROAD
LIVONIA, MICHIGAN 48150-1065
(734) 591-4444

NORTHVILLE CITY HALL
215 WEST MAIN STREET
NORTHVILLE, MICHIGAN

Project No:	Drawn By:	Detail No:
23-065	APW	15
Date: 11-28-23	Checked By: RDK	

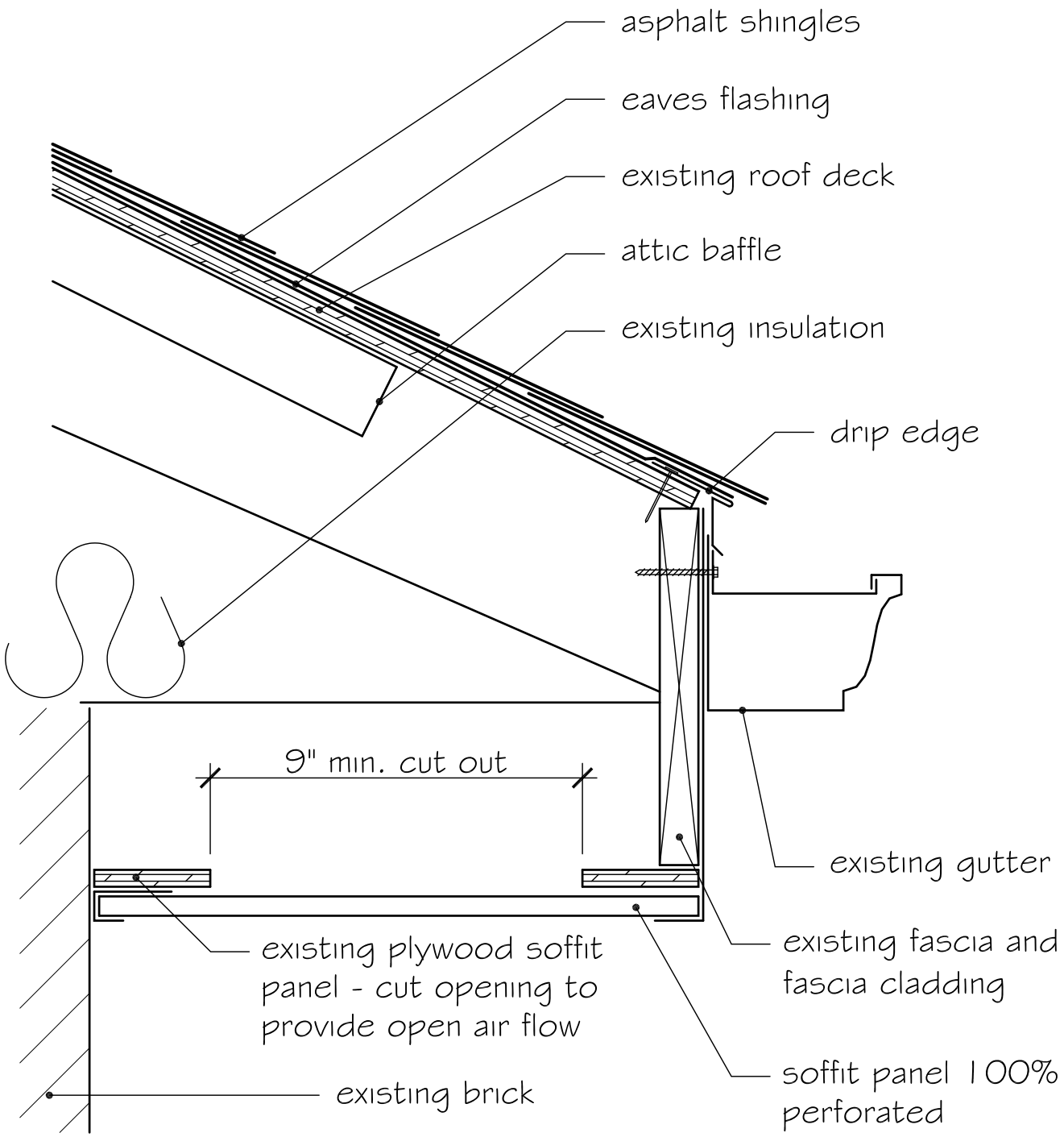

EAVES EDGE

not to scale

NOTE: components shown are new unless noted as existing

rta
ROOFING TECHNOLOGY ASSOCIATES, LTD.
38031 SCHOOLCRAFT ROAD
LIVONIA, MICHIGAN 48150-1065
(734) 591-4444

NORTHVILLE CITY HALL
215 WEST MAIN STREET
NORTHVILLE, MICHIGAN

Project No:	Drawn By:	Detail No:
23-065	JPW	16
Date: 11-7-23	Checked By: RDK	

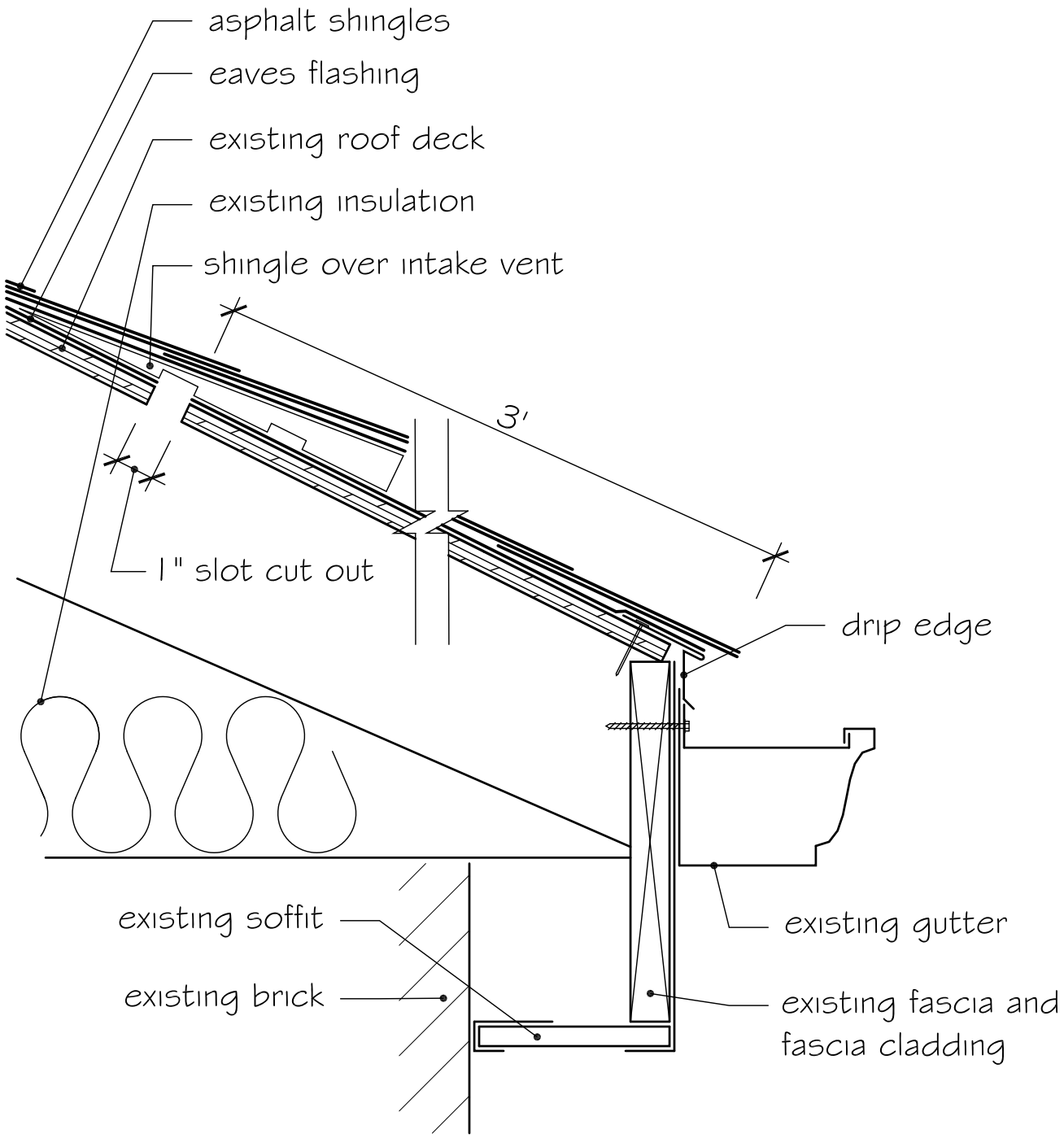

SHINGLE OVER INTAKE VENT

not to scale

NOTE: components shown are new unless noted as existing

ROOFING TECHNOLOGY ASSOCIATES, LTD.
38031 SCHOOLCRAFT ROAD
LIVONIA, MICHIGAN 48150-1065
(734) 591-4444

NORTHVILLE CITY HALL
215 WEST MAIN STREET
NORTHVILLE, MICHIGAN

Project No:	Drawn By:	Detail No:
23-065	JPW	17
Date: 11-7-23	Checked By: RDK	

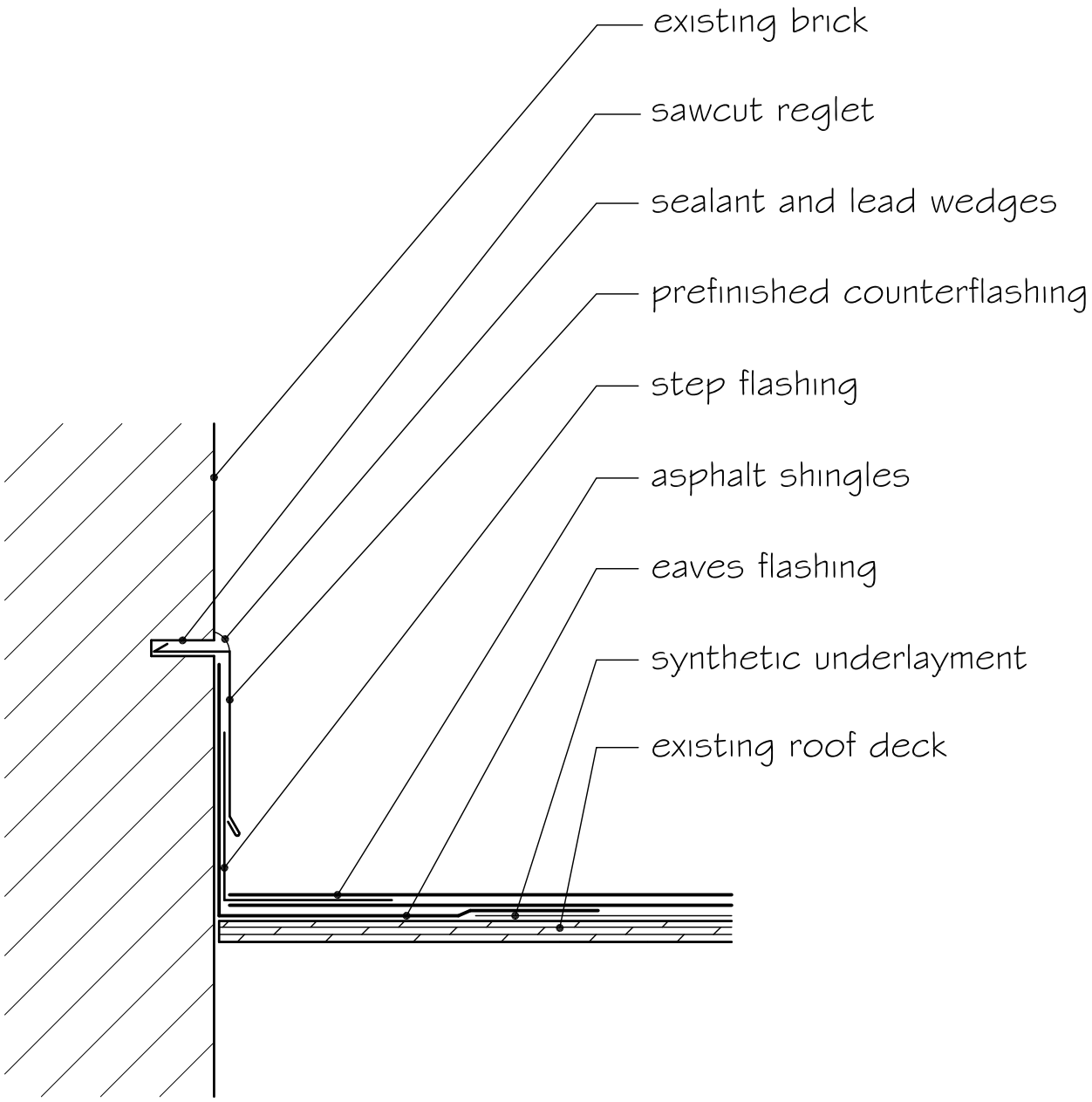

STEP FLASHING

not to scale

NOTE: components shown are new unless noted as existing

ROOFING TECHNOLOGY ASSOCIATES, LTD.
38031 SCHOOLCRAFT ROAD
LIVONIA, MICHIGAN 48150-1065
(734) 591-4444

NORTHVILLE CITY HALL
215 WEST MAIN STREET
NORTHVILLE, MICHIGAN

Project No:	Drawn By:	Detail No:
23-065	APW	18
Date: 11-7-23	Checked By: RDK	

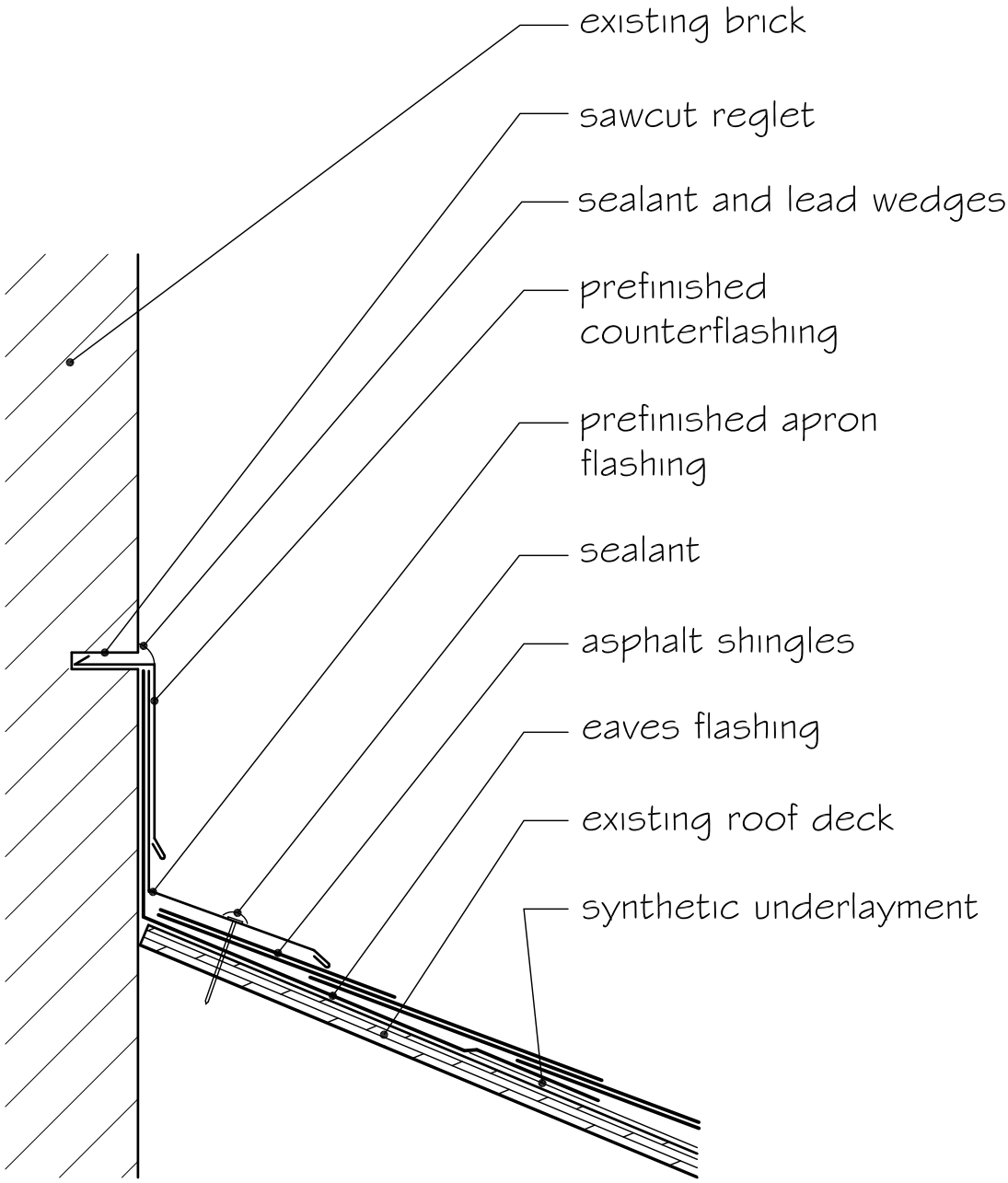

APRON FLASHING

not to scale

NOTE: components shown are new unless noted as existing

ROOFING TECHNOLOGY ASSOCIATES, LTD.
38031 SCHOOLCRAFT ROAD
LIVONIA, MICHIGAN 48150-1065
(734) 591-4444

NORTHVILLE CITY HALL
215 WEST MAIN STREET
NORTHVILLE, MICHIGAN

Project No:	Drawn By:	Detail No:
23-065	APW	19
Date: 11-7-23	Checked By: RDK	

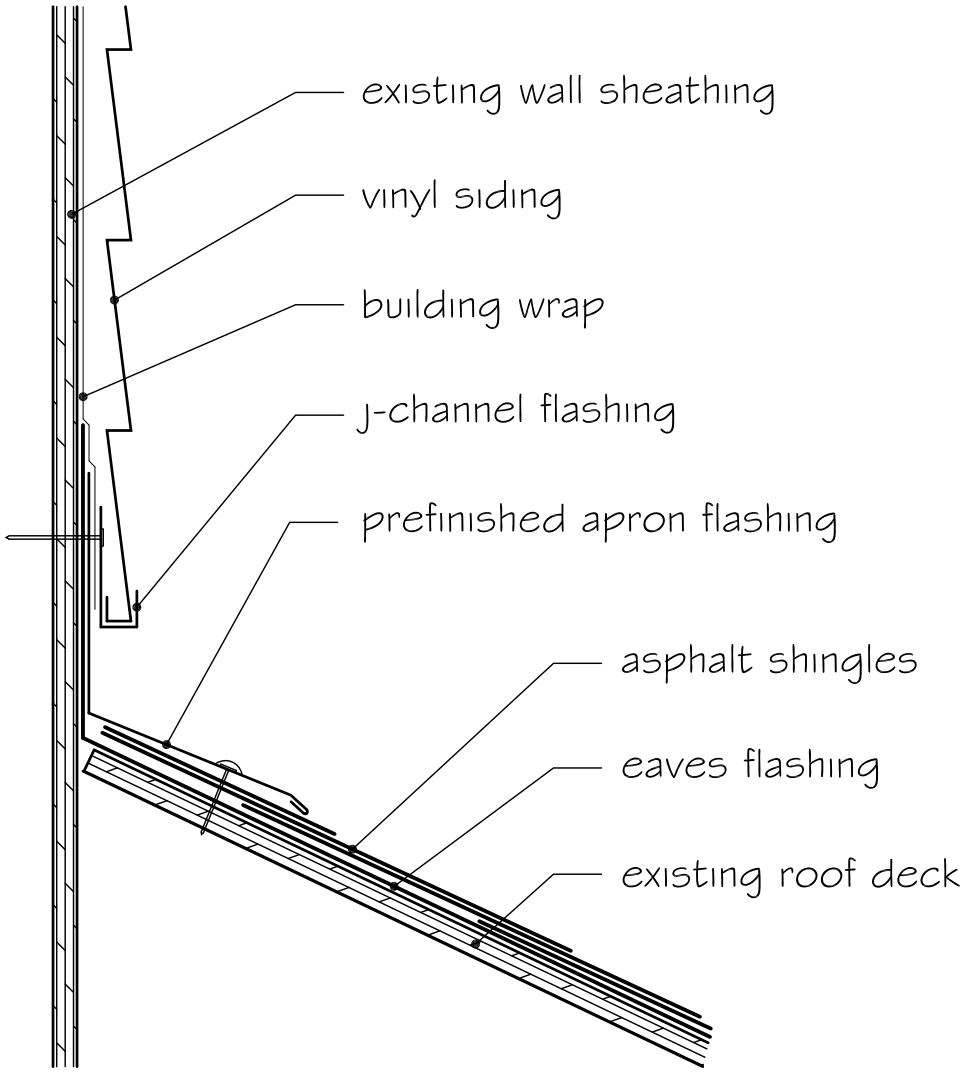

APRON FLASHING

not to scale

NOTE: components shown are new unless noted as existing

ROOFING TECHNOLOGY ASSOCIATES, LTD.
38031 SCHOOLCRAFT ROAD
LIVONIA, MICHIGAN 48150-1065
(734) 591-4444

NORTHVILLE CITY HALL
215 WEST MAIN STREET
NORTHVILLE, MICHIGAN

Project No:	Drawn By:	Detail No:
23-065	APW	20
Date: 11-7-23	Checked By: RDK	

DOWNSPOUT — GUTTER CONNECTIONS

FIGURE 1-33

Figure 1-33A shows the preferred orientation of a rectangular gutter outlet. It has been suggested that dimension A should approach dimension W, the gutter width, B should approach the gutter depth, and that the transition to the downspout have a length equal to W.

Figure 1-33B shows the more common orientation for rectangular outlets. With this configuration, fewer fittings are necessary to get the downspout's greater dimension against a wall.

Figure 1-33C and Section A–A show a type of tube outlet frequently used on residential buildings. The smallest area of the taper relates to draining capacity which may be less than that of the downspout sized from Table 1-2. The downspout is shown with a slip fit only but it may be riveted to the tube.

The text of Figure 1-24, gutter accessories, states that the dimensions illustrated in Detail 1 should be used for outlets. The minimum flange width for outlets is ⅜ in. (10 mm). The flange is riveted and soldered. Or with aluminum and precoated metal, it is set in sealant, riveted and the rivets are sealed.

Detail 2 shows a loose connection that can serve as a vent or overflow relief; it can also allow some relative movement of the gutter from thermal expansion.

Figure 1-33D illustrates the type of solid connection that must be used on built-in gutters. It may also be used on other types of gutters. Welded connections are an alternative. Various other methods of attaching roof drains to gutters also exist. Flexible piping may be used to allow movement due to expansion. However, it is critical to provide clearance for movement around the downspout if the gutter will move at an outlet connection.

Figure 1-33E shows a transition with a more efficient inlet to a downspout. This may be considered where high assurance of gutter draining is desired. Size this as discussed for Figure 1-33A. A funnel or conductor head might also be used to conceal two outlets in cases like that shown in Figure 1-5C.

Open faced downspouts should not have offsets–straight drop only. Open–faced downspouts are used in high–volume flows and where icing conditions exist to avoid downspout damage due to freezing or stoppage conditions.

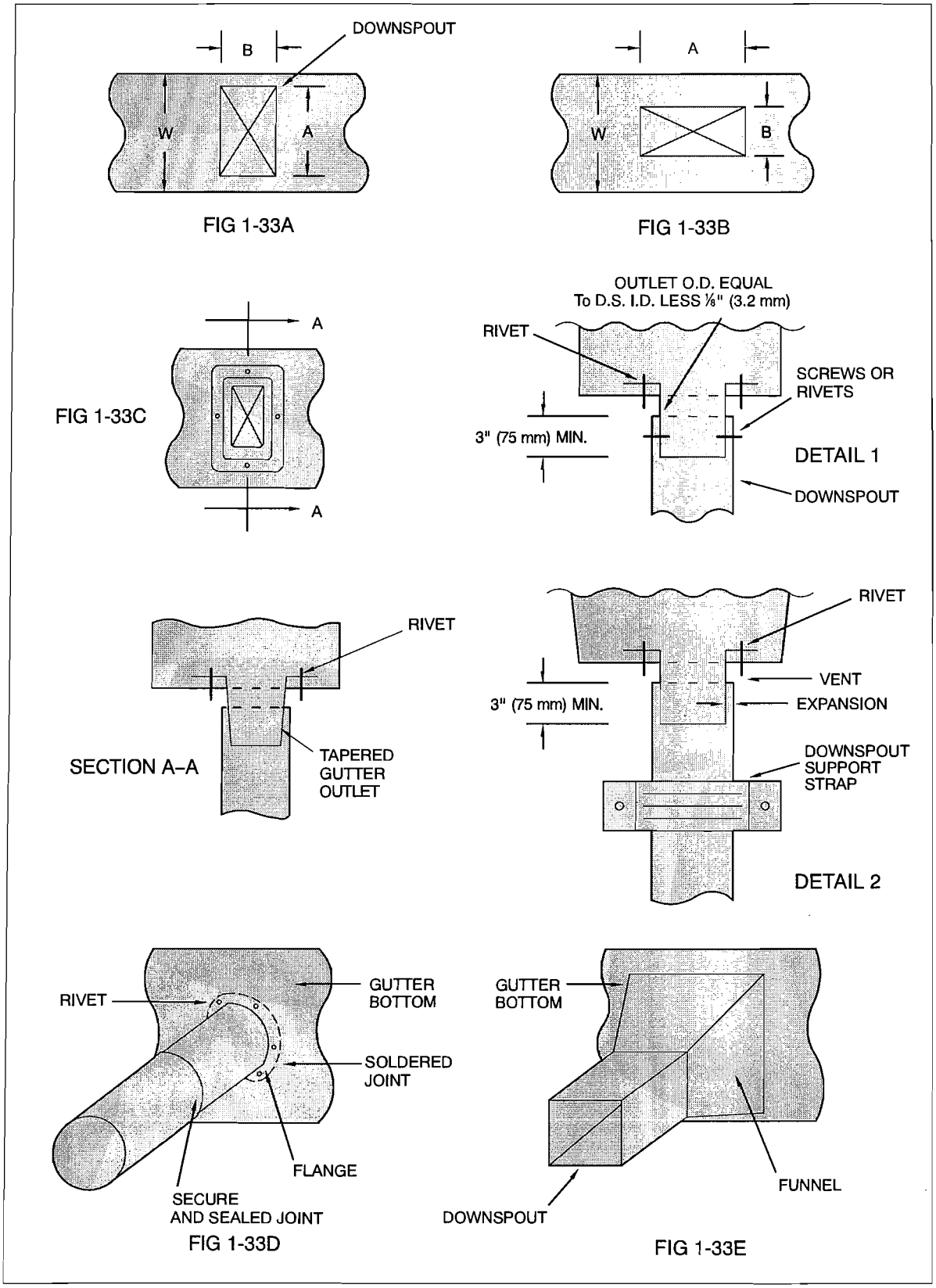

FIGURE 1–33 DOWNSPOUT — GUTTER CONNECTIONS

SHOP-FABRICATED DOWNSPOUT HANGERS

Figure 1-35 illustrates several shop-fabricated downspout hangers. Other styles may be used. Ornamental bands may be used in conjunction with any of these hangers.

Figures 1-35A, B, C, and G show hangers used for rectangular or square downspouts. Figures 1-35D, E, and J have been designed for round downspouts. These hangers should be fabricated of 1/16 × 1 in. (1.6 × 25 mm) flat stock (minimum) and be of the same material as the downspout.

FIGURE 1-35

Figure 1-35H shows a light-gage hanger for square or rectangular downspouts. This hanger must be removed to repair the downspout. The hanger should be of the same material as the downspout but two gages heavier.

The fasteners for these hangers could be screws, bolts, or blind rivets. To reduce clogging, use fasteners with minimal penetration length.

Downspouts of 10 ft (2.5 m) or less shall have two straps of support, and longer downspouts shall be supported at 10 ft (2.5 m) maximum intervals.

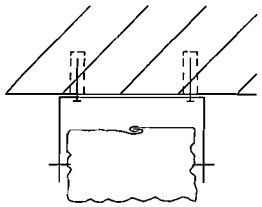

FIG 1-35A

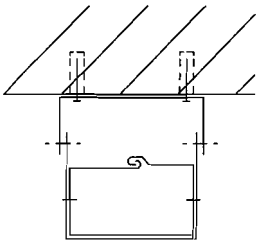

FIG 1-35B

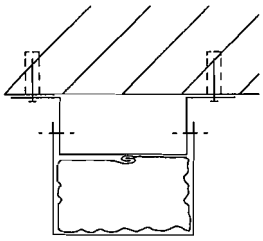

FIG 1-35C

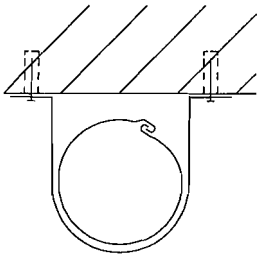

FIG 1-35D

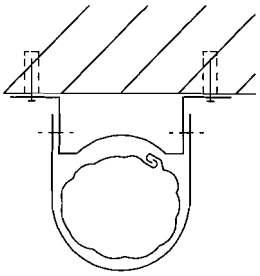

FIG 1-35E

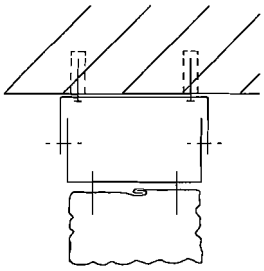

FIG 1-35F

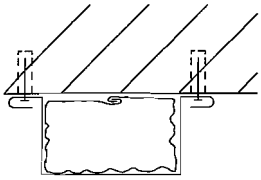

FIG 1-35G

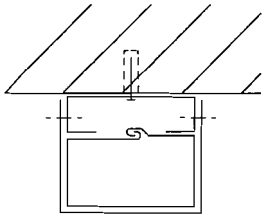

FIG 1-35H

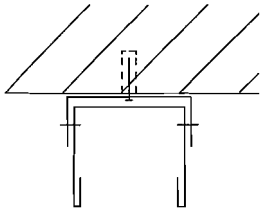

FIG 1-35I

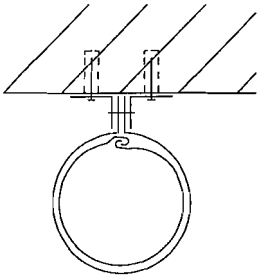

FIG 1-35J

FIGURE 1–35 SHOP-FABRICATED DOWNSPOUT HANGERS

FORMED GRAVEL-STOP–FASCIA — JOINT SYSTEMS

FIGURE 2–5

Figure 2–5 illustrates three different joints for formed gravel-stop–fascia systems. Soldered or welded joints are not recommended, except at corners, because they offer no provision for expansion and contraction.

Figure 2–5A shows a gravel-stop installed with a ¼ in. (6.4 mm) opening between sections. This opening is covered by a 6 in. (152 mm) cover plate formed to the profile of the gravel-stop. The cover plate is embedded in compatible sealant, nailed through the opening between the gravel-stop sections, and loose locked to the drip edge.

Detail 1 shows the notch necessary in the concealed drip edge at a lap.

Figure 2–5B shows a lap joint for gravel-stop. The joint should be set in compatible sealant and lapped 4 in. (102 mm). Lap joints should not be used where the face exceeds 4 in. (102 mm).

Figure 2–5C shows a gravel-stop installed using a 6 in. min (152 mm) back–up plate. The back–up plate is nailed in place before the gravel-stop is installed. Mastic is applied, and the gravel-stop set in place with a ¼ in. opening between sections. The back–up plate must be formed to the exact profile of the gravel-stop. Adding a cover plate is an alternative (from Figure 2–5A).

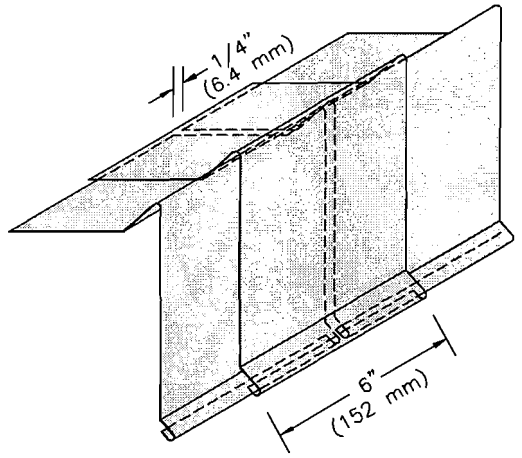

FIG 2–5A

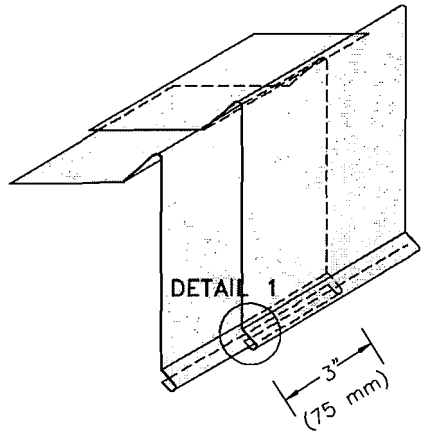

FIG 2–5B

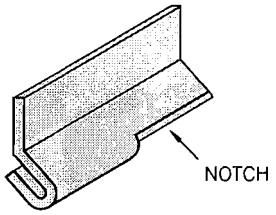

DETAIL 1

ALL JOINT LAPS
TO BE SEALED

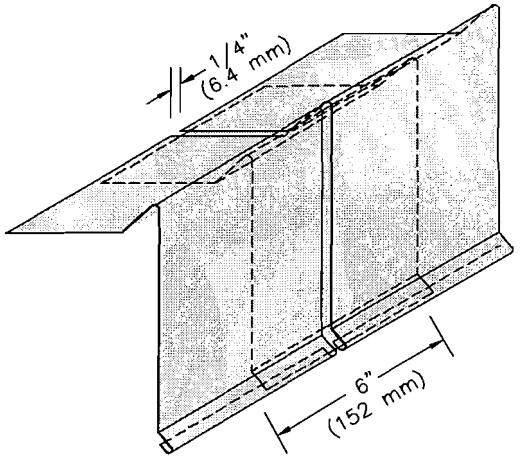

FIG 2–5C

FIGURE 2–5 FORMED GRAVEL-STOP–FASCIA — JOINT SYSTEMS

Figure 4–5A shows counter flashing installed using a metal reglet which is furnished by the sheet metal contractor for installation by others. The reglet is attached to the forms before the concrete is poured. Reglet corners should be mitered.

The counter flashing is held in place by wedges and the reglet filled with a sealant.

The counter flashing is notched and lapped at inside corners and joints. Outside corners are notched and seamed.

The Alternate Detail shows another method of installing counter flashing. The counter flashing is snapped in place and the reglet filled with a compatible sealant.

Reglets installed in concrete forms usually need to be fastened 12 in. (305 mm) OC to avoid being dislodged by vibration of concrete mix. Figure 4–5B shows a complete counter flashing system for use with poured concrete walls. The flashing receiver is furnished by the sheet metal contractor for installation by others. This receiver is attached to the forms before the concrete is poured. The down leg of the receiver is butted at corners. After the roofing and composition flashing are in place, the counter flashing is riveted to the receiver. The counter flashing is lapped at all joints and is lapped and sealed at corners.

Figure 4–5C shows a counter flashing method that can be used for exterior wall coverings of several types, both metallic and non-metallic.

The recommended minimum gage for counter flashing shown in this figure is 16 oz. (0.55 mm) copper, 26 ga (0.477 mm) stainless steel, or 26 ga (0.5512 mm) galvanized steel.

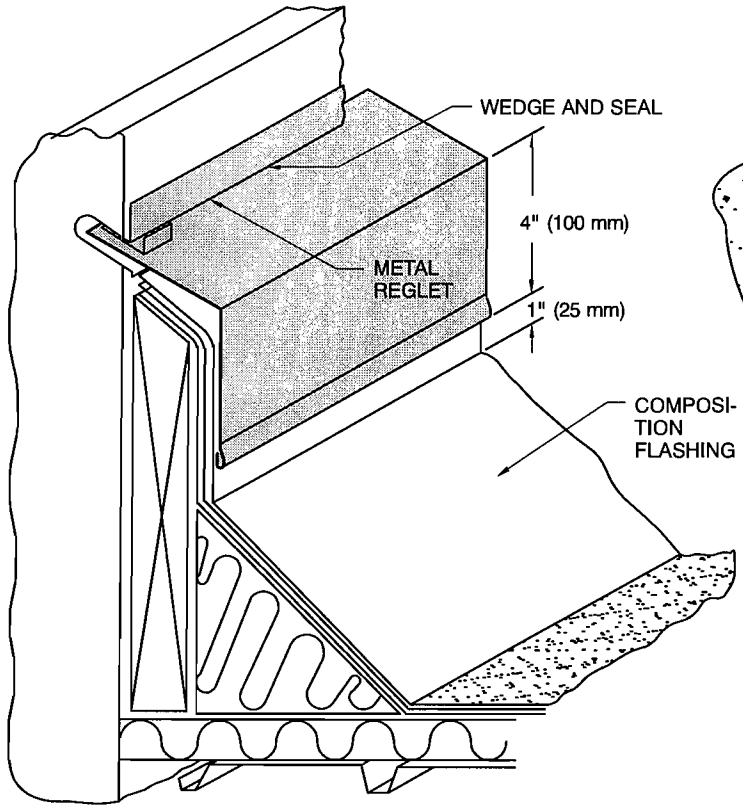

FIG 4–5A

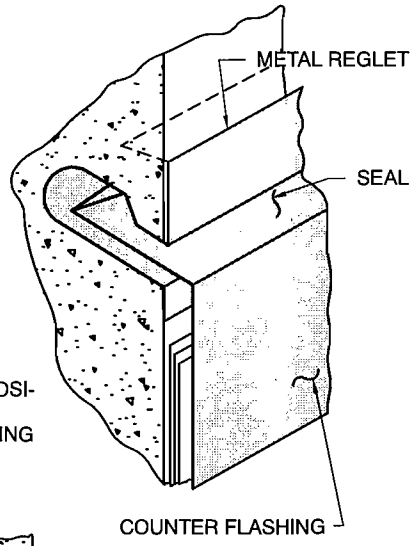

ALTERNATE REGLET DETAIL

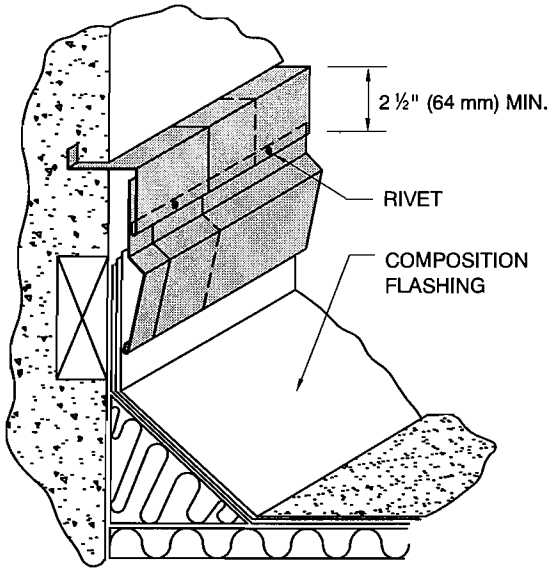

FIG 4–5B

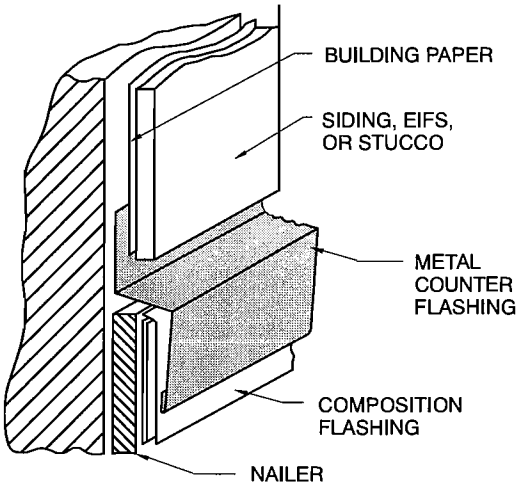

FIG 4–5C

FIGURE 4–5 COUNTER FLASHING SYSTEMS — INSTALLATION

The sections of roofs shown in Figure 4–8 illustrate methods for flashing the junction of a sloping roof and a masonry wall.

Figure 4–8A shows a metal flashing system for a shingle roof sloping along a masonry wall. Separate pieces of base flashing are installed as each course of shingles is applied. The upper edge of each piece of flashing should extend 2 in. (50 mm) above each course of shingles. The lower edge should be ½ in. (13 mm) above the butts of the shingles forming the next course.

The flashing must extend up the wall and onto the roof a minimum of 4 in. (100 mm). Nail the flashing pieces to the roof sheathing above the top of each shingle course.

Install the counter flashing in a reglet left by the mason as shown. Use wedges or tension-forming shapes to hold the counter flashing in place and fill the reglet with a compatible sealant. The length of each piece of counter flashing will vary with the slope of the roof but no step should be more than 3 bricks high. The width will vary but should always be wide enough to cover 4 in. (100 mm) of the base flashing Pre–installed through wall receiver flashing should include end dams to the up slope.

A preferred installation is to have the mason install a flashing receiver as shown in Figure 4–8B. (Also, *see* Figure 4–4A.)

Figure 4–8B shows a type of base flashing that must be attached to the roof before the shingles are installed. The roof portion of this runner flashing is formed with a hook edge and is cleated on 24 in. (610 mm) centers. Extend flashing up the wall. Lap the joints in the flashing 6 in. (152 mm) in the direction of water flow.

Install the counter flashing as described in Figure 4–8A. However, use flashing receiver as described in Figure 4–8B. (Also *see* Figure 4–4A.)

The flashing in Figures 4–8A and B are for shingle, slate, and tile roofing.

Figure 4–8C illustrates a sloping built-up roof intersecting a wall. Composition base flashings are installed over a cant and brought up the wall. *See* Figure 4–6.

Figure 4–8D illustrates a base flashing for a half-round tile roof. It is step flashed as shown in Figure 4–8 A or B.

Figure 4–8E shows a tile roof abutting a stucco wall. The counter flashing cap is nailed to the wall, and it extends a minimum of 2 in. (50 mm) above the base flashing pan.

The recommended minimum gage for flashings shown on this plate is 16 oz. (0.55 mm) copper, 26 ga (0.477 mm) stainless steel, or 26 ga (0.454 mm) galvanized steel, or coated metal.

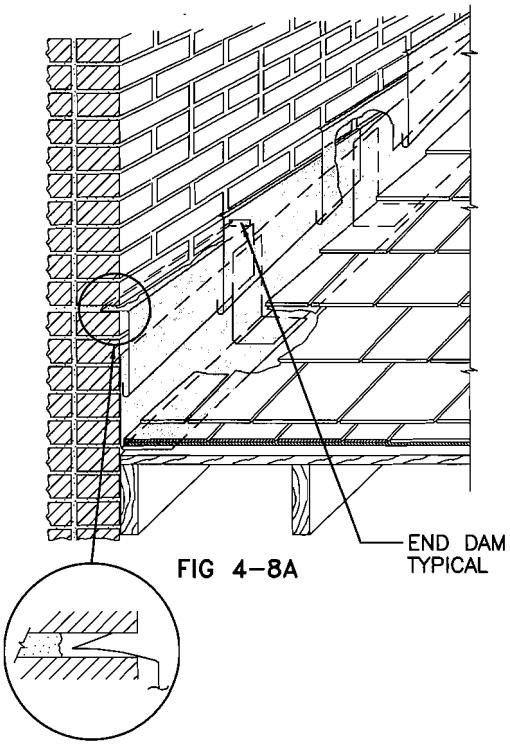

FIG 4–8A

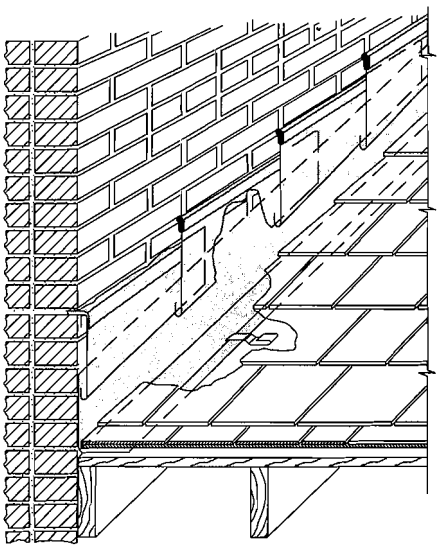

FIG 4–8B

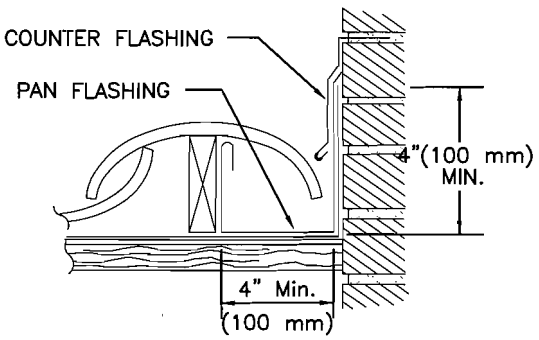

FIG 4–8D

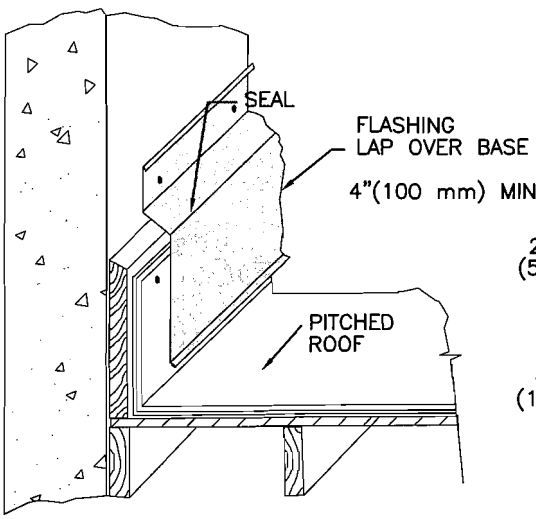

FIG 4–8C

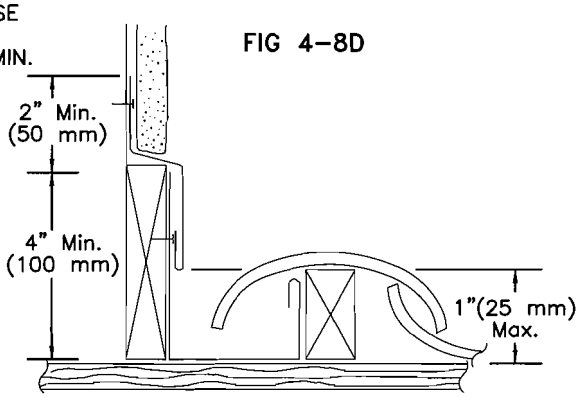

FIG 4–8E

FIGURE 4–8 BASE AND COUNTER FLASHING SYSTEMS — INSTALLATION

CHIMNEY FLASHING

FIGURE 4–14

Figure 4–14 illustrates a flashing system for a chimney penetrating a sloping roof.

In Figure 4–14A apron flashing is installed after the course of shingles immediately below the chimney is in place. The sides of chimney are flashed using pieces of base flashing installed with each course of shingles. The upper edge of each piece of flashing should extend 2 in. (50 mm) above each course of shingles. The lower edge should be ½ in. (13 mm) above the butts of the shingles forming the next course. The base flashing must extend up the wall and onto the roof a minimum of 4 in. (100 mm).

The counter flashing is installed in a reglet left by the mason in steps as shown. Wedges or tension forming shapes are used to hold the flashing in place and reglet is filled with a sealant.

The length of each piece of counter flashing will vary with the slope of the roof but no step should be more than 3 bricks high. The width will vary but should always be wide enough to cover 4 in. (100 mm) of the base flashing.

Detail 1 shows a type of base flashing that must be attached to the roof before the shingles are installed. The roof portion of this runner flashing has been formed with a hook edge and is cleated on 12 in. (305 mm) centers. The base flashing is extended up the wall a minimum of 4 in. (100 mm). The counter flashing is installed in a flashing receiver (*see* Figure 4–4).

Figure 4–14B shows a saddle flashing (cricket) in place on the back of a chimney. Saddle flashings help to divert rain and snow away from the chimney. Increase skirt to suit steeper pitch and local conditions. All joints in saddle flashings must be soldered. Detail 2 gives minimum dimensions for the construction of saddles. Dimensions and design should be adjusted as necessary for specific weather conditions and the roof pitch. Appropriate underlayment or membrane should be installed over the substrate, under all metal flashing and up walls, chimneys, penetrations and similar vertical transitions to divert water from intruding into the building's envelop.

Additional underlayment installed over the metal edges provides additional protection from water infiltration.

Saddle flashing must be flanged 4 in. (100 mm) up the wall of chimney and 4 in. (100 mm) onto roof. It is cleated to the roof deck on 12 in. (305 mm) centers using cleats of the same material as the saddle. Step counter flashing is installed in a reglet as shown, or may be installed in a flashing receiver.

These details are acceptable for shingle, slate, or tile roofs.

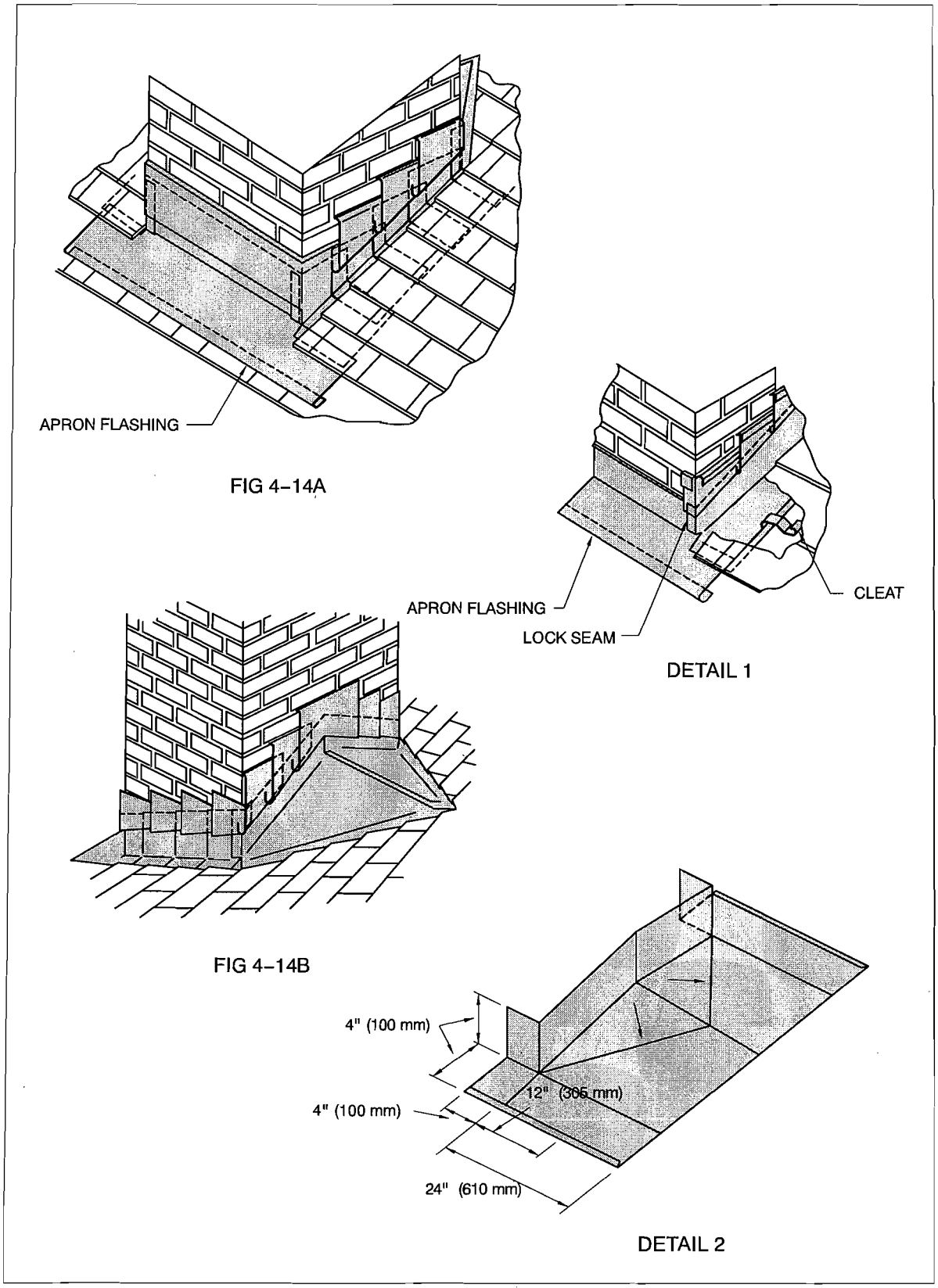

FIGURE 4–14 CHIMNEY FLASHING

3.2.1 Underlayment Configurations

There are different underlayment configurations that can be used for asphalt shingle roof systems. Generally, these configurations can be categorized as follows:

- single layer of underlayment
- single layer of self-adhering underlayment
- double layer of underlayment

A "single layer of underlayment" is one layer of underlayment fastened to the deck before application of a roof covering. For single layer applications, all felts should be applied horizontally in shingle fashion and lapped a minimum of 2 inches (50 mm) over the preceding felt sheet. Endlaps should be a minimum of 4 inches (100 mm). An underlayment should be fastened with nails or staples, as necessary to hold the felts in place until the installation of a primary roof covering. (See Figures 1 and 2)

A "single-layer of self-adhering underlayment" consists of one layer of self-adhering, polymer-modified bitumen sheet membrane applied over a roof deck. This type of membrane is designed to be used as an ice dam protection membrane. Designers should note that these types of membranes, when installed over an entire roof area, act as air and vapor retarders. Potential problems with ventilation, moisture control and vapor retarder placement should be considered during the design phase. See Figures 1 and 2.

A "double-layer underlayment" is two layers of underlayment fastened to a roof deck before the application of asphalt shingles. When a double-layer underlayment is required, felt should be applied horizontally in shingle fashion. For double-layer applications, all felts should be lapped a minimum of 19 inches (480 mm) over the preceding felt sheet. Endlaps should be a minimum of 4 inches (100 mm). An underlayment should be fastened appropriately for the slope of the roof to hold the felts in place until a primary roof covering material is applied. See Figures 3 and 4

When a double-layer configuration is used and underlayment layers are identical materials, they are commonly installed in shingle fashion with 19 inches (480 mm) overlap and 17 inches (430 mm) exposure. However, if one layer is used to "dry-in" the building temporarily or underlayments of two differing compositions are used, it is common for each layer to be applied in a single-layer configuration.

3.2.2 Roof Slope

The following are recommendations for underlayments used with asphalt shingles with respect to roof slope.

- On roof decks having a slope of 4:12 (18 degrees) or more, a minimum of one layer of No. 15 asphalt-saturated felt underlayment should be applied horizontally in shingle fashion to serve as the underlayment. See Figures 1 and 2.

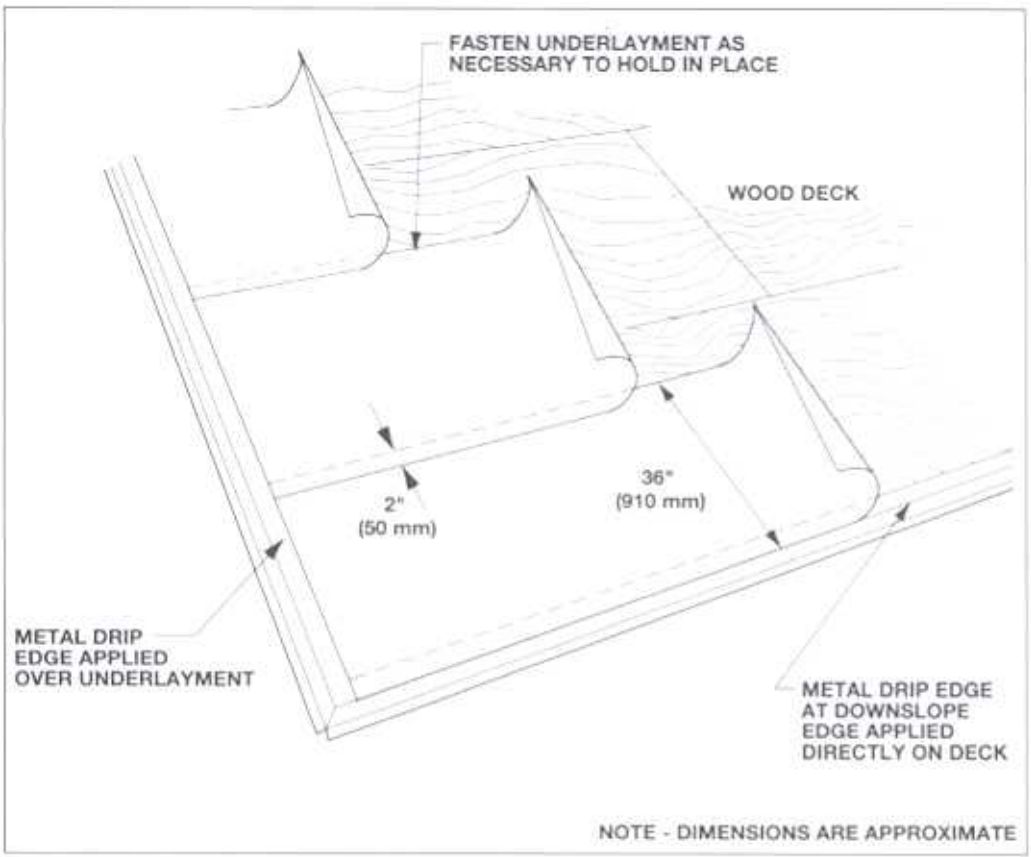

Figure 1: Single layer underlayment

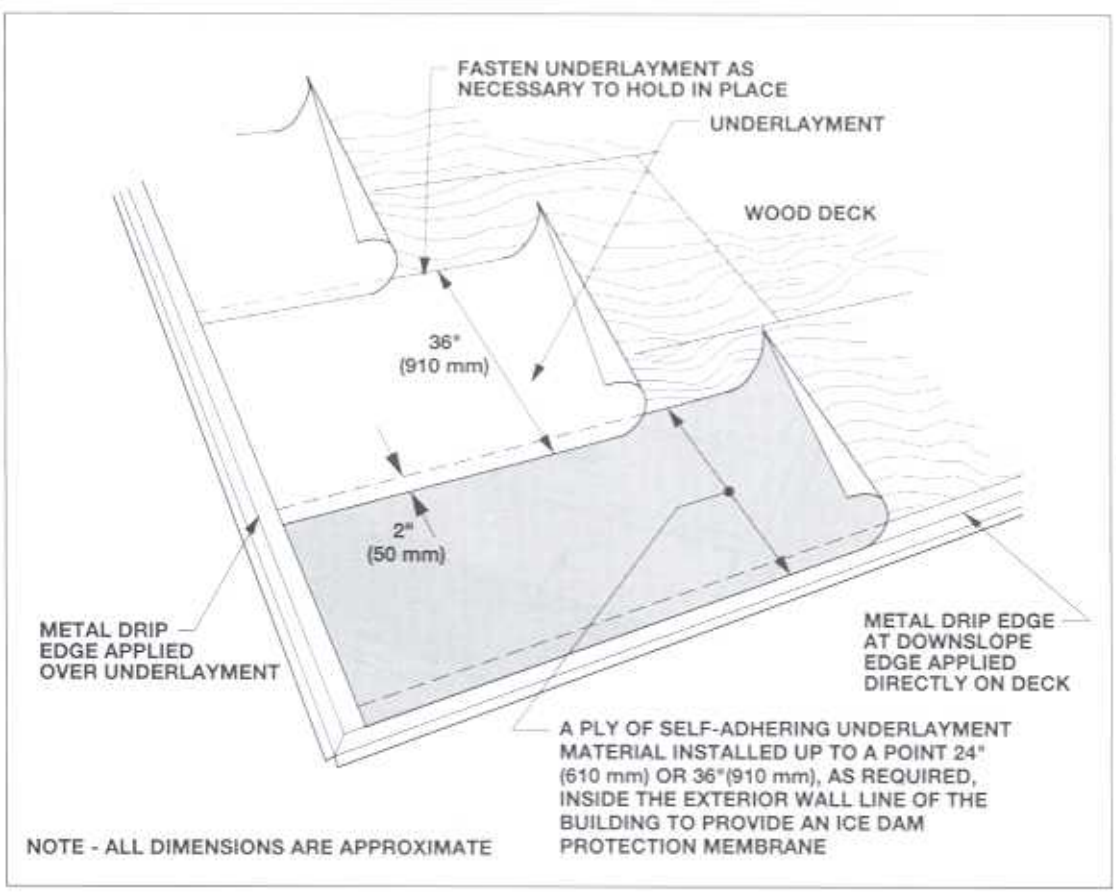

Figure 2: Single layer of underlayment with ice dam protection membrane

3.6.3.2 Closed-cut valleys

In closed-cut valleys, shingles on one side of the valley are installed across the valley and shingles from the other side are cut about 2 inches (50 mm) off the center line of the valley and may be sealed with asphalt roof cement. See Figure 15.

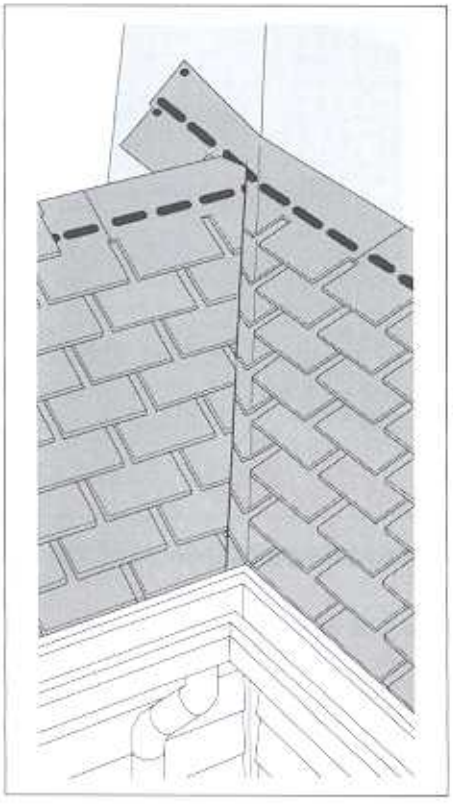

Figure 15: Closed-cut valley

3.6.3.3 Woven Valleys

Shingles from adjoining roof areas are woven to form a closed valley. The woven valley method illustrated in Figure 18, is generally limited to strip shingles on roof systems where the valley slopes are at least 4:12 (18 degrees). Where heavy accumulations of debris or plant growth may accumulate between shingle cutouts and joints, a woven valley may hamper runoff. Therefore, as with all valley types, specifying a woven valley should be carefully considered to be sure it is beneficial for a particular project.

NRCA does not recommend the use of woven valleys with laminated or individual locking-type shingles. Laminated shingles can be difficult to use to create a woven valley. When laminated shingles from opposite sides of a valley are woven, they can make for a relatively thick buildup of material, which can make the resultant valley irregularly sloped and slower draining. Individual locking-type shingles cannot be used with woven valley construction because nails are required for each tab, which would mean placing nails at or near the center of a valley. See Figure 16.

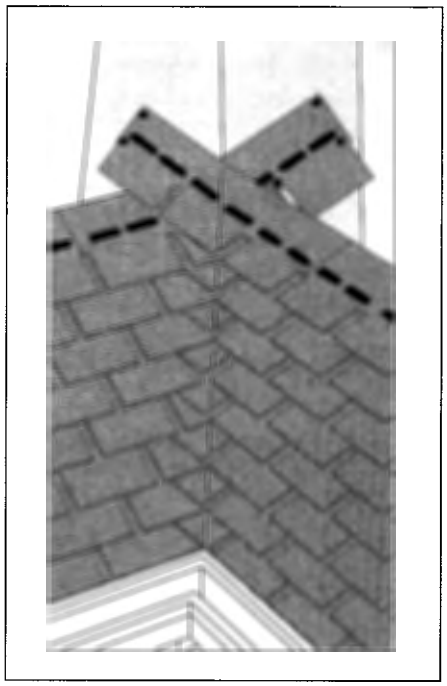

Figure 16: Woven valley

3.6.4 Vertical Surfaces

There are four types of metal flashings that are commonly used at locations where a roof system abuts a vertical wall:

- apron flashing — a metal used at a head-wall transition, such as the downslope side of a chimney.
- step flashing — used at a side-wall transition, such as the side of a dormer.
- cricket or backer flashing — used at the upslope side of a roof penetration, such as a chimney
- counterflashing — secured to a vertical wall and used to cover and protect the top edge of an apron, step and cricket (or backer) flashing.

Figure 17 shows a chimney penetration and the use of all four flashing types.

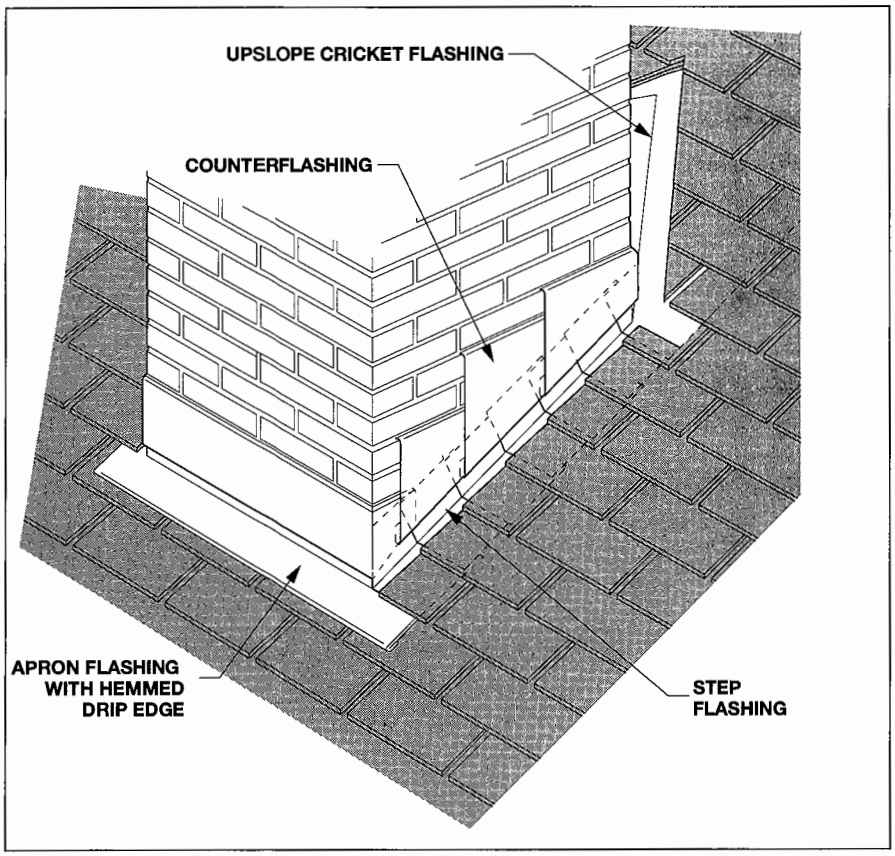

Figure 17: Basic sheet metal flashing components used at chimney

Generally, before flashings are applied, an asphalt-saturated felt underlayment should be applied to a roof deck around roof penetrations. However, in moderate and severe climates, before an underlayment is applied, an ice dam protection membrane may be installed around the base of chimneys or curbs. If appropriately specified and constructed, an ice dam protection membrane can assist in keeping water from migrating into a roof system at these roof-to-wall intersections during times of severe freeze-thaw cycling.

3.6.4.1 Apron Flashings

Apron flashings provide a weatherproofing transition material where a roof area intersects a head wall. Common locations for apron flashings are the front downslope side of a dormer or chimney, curbed roof penetrations and clerestory transitions. See Figure 18.

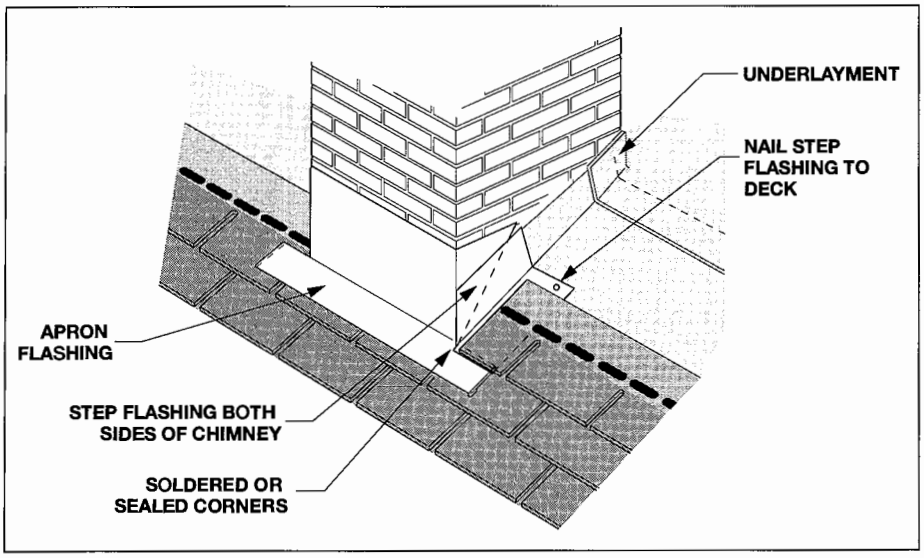

Figure 18: Apron flashing at chimney

The type and minimum thickness of the metal used for apron flashing should be commensurate with the anticipated service life for the asphalt shingle roof system. NRCA suggests metal apron flashings for asphalt shingle roof systems be fabricated from one of the following metal types and minimum thicknesses.

- 26 gauge (0.019 inch [0.48 mm] thick) galvanized steel
- 26 gauge (0.019 inch [0.48 mm] thick) prefinished galvanized steel
- 0.032 inch (0.81 mm) thick aluminum
- 0.032 inch (0.81 mm) thick prefinished aluminum
- 26 gauge (0.018 inch [0.46 mm] thick) stainless steel
- 16 ounce (0.022 inch [0.56 mm] thick) copper
- 16 ounce (0.026 inch [0.66 mm] thick) lead-coated copper
- 4 pound (0.062 inch [1.57 mm] thick) lead.

In some regions, particularly those with mild climates, other types of metal and/or metals of lesser thickness than are shown above may be used successfully. NRCA considers these applications to be area practices. Refer to the Introduction for additional information about area practices.

3.6.4.2 Step Flashings

When a roof area intersects a side wall, individual pieces of metal flashing are installed at the end of each shingle course. This is referred to as step flashing. See Figure 19.

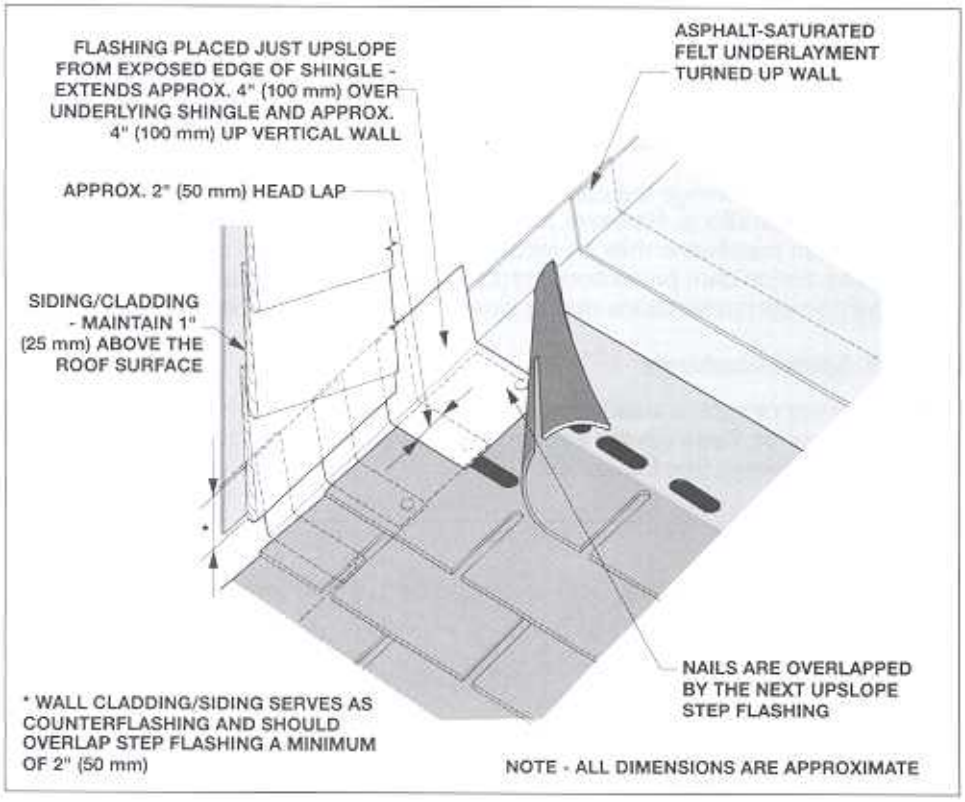

Figure 19: Use of metal step flashing for weatherproofing the intersections of sloping roof and vertical wall

The type and minimum thickness of the metal used for step flashing should be commensurate with the anticipated service life for the asphalt shingle roof system. NRCA suggests metal step flashing for asphalt shingle roof systems be fabricated from one of the following metal types and minimum thicknesses.

- 26 gauge (0.019 inch [0.48 mm] thick) galvanized steel
- 26 gauge (0.019 inch [0.48 mm] thick) prefinished galvanized steel
- 0.032 inch (0.81 mm) thick aluminum

- 0.032 inch (0.81 mm) thick prefinished aluminum
- 26 gauge (0.018 inch [0.46 mm] thick) stainless steel
- 16 ounce (0.022 inch [0.56 mm] thick) copper
- 16 ounce (0.026 inch [0.66 mm] thick) lead-coated copper
- 4 pound (0.062 inch [1.57 mm] thick) lead.

In some regions, particularly those with mild climates, other types of metal and/or metals of lesser thickness than are shown above may be used successfully. NRCA considers these applications to be regional practices. Refer to the Introduction for additional information about regional practices.

For most regions, NRCA suggests using metal step flashing that is 7 inches (180 mm) long by 8 inches (200 mm) wide for standard-size shingles, so a 2 inch (50 mm) minimum step flashing headlap is achieved and a 4 inch (100 mm) extension is obtained onto each underlying shingle and 4 inches (100 mm) up the vertical surface.

Many suppliers and contractors are continuing to use a narrow width of step flashing (as narrow as 5 inches [125 mm]), so only 2 ½ inches (64 mm) extends out onto underlying shingles. Experience has shown this detail can work in some relatively mild geographic areas.

For nonstandard shingles, the length of step flashing can be determined by using the general guideline:

Exposure + 2 inches = length of step flashing

(Exposure + 50 mm = length of step flashing)

For example, if a shingle's exposure is 8 inches (200 mm), the size of the step flashing would be 8 inches (200 mm) wide by 10 inches (250 mm) long.

Special attention needs to be paid to the first (i.e., bottom most) step flashing where an eave intersects a continuous vertical surface to ensure water is diverted to the outside of the wall covering. See Figures 20 and 21.

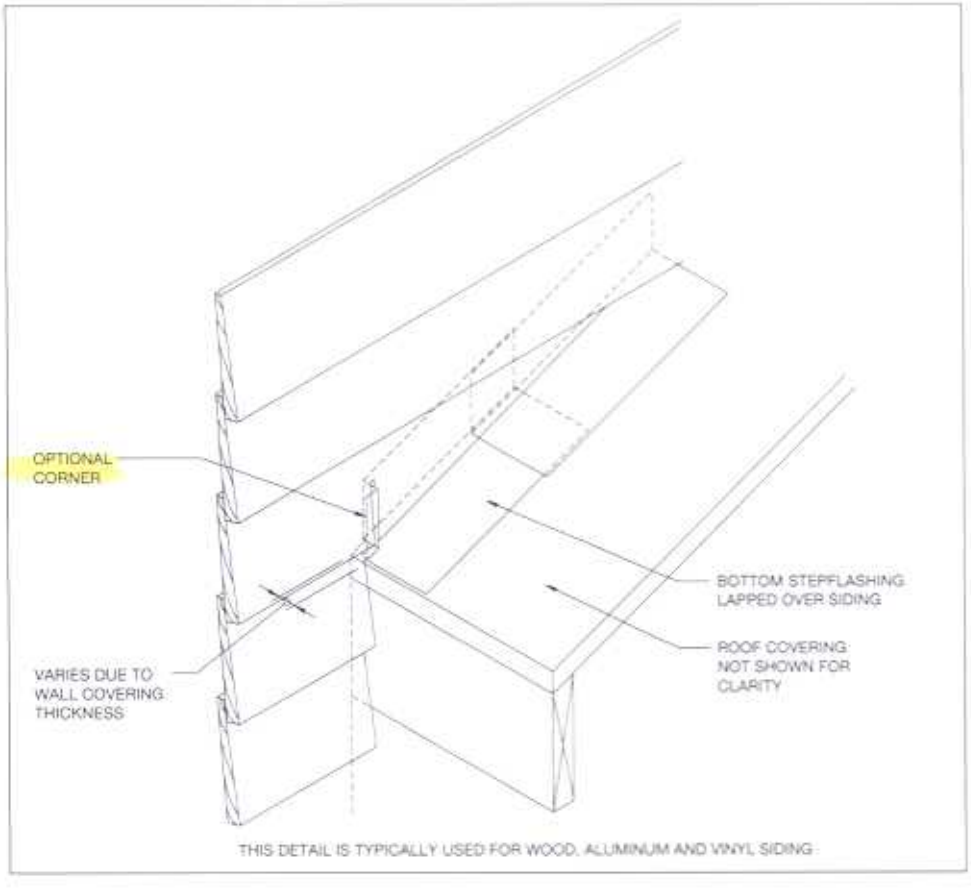

Figure 20: Soldered one-piece step flashing at eave-to-wall interface

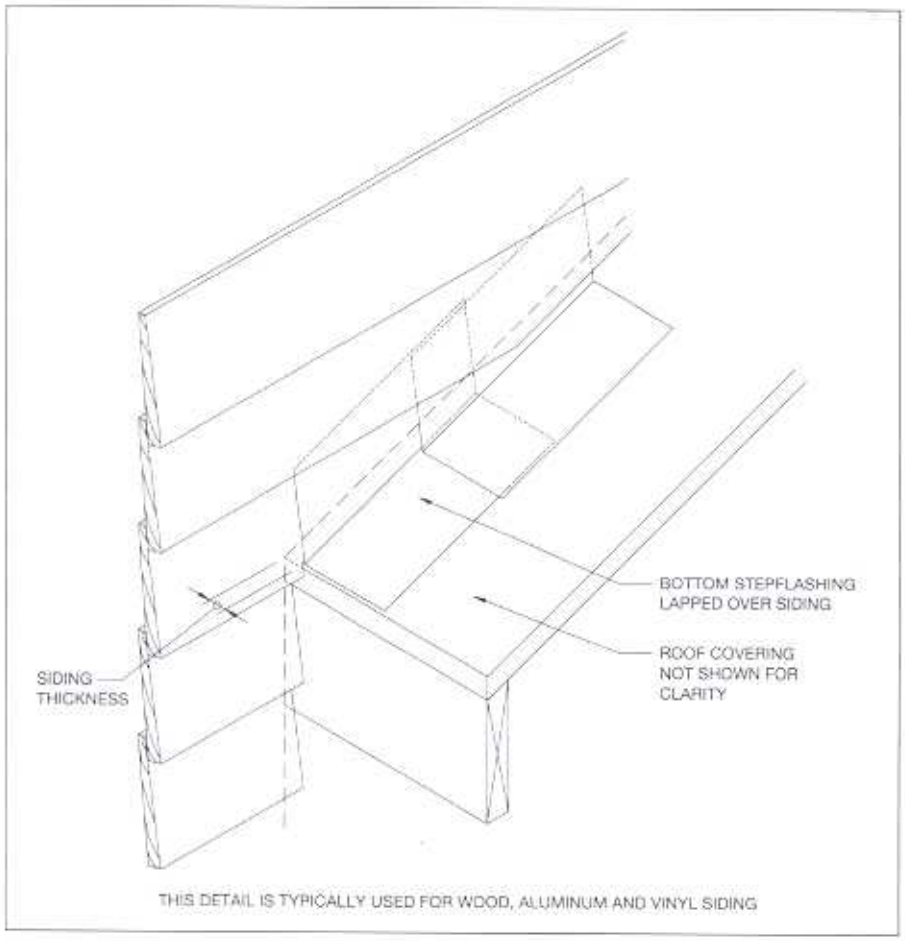

Figure 21: Step flashing at eave-to-wall interface

3.6.4.3 Cricket or Backer Flashings

When a roof area intersects the upslope side of a chimney or curbed roof penetration, either a cricket or backer flashing is installed. A cricket diverts water around the penetration, and a backer flashing provides a weatherproofing transition material where the roof intersects the back of the penetration. See Figure 22.

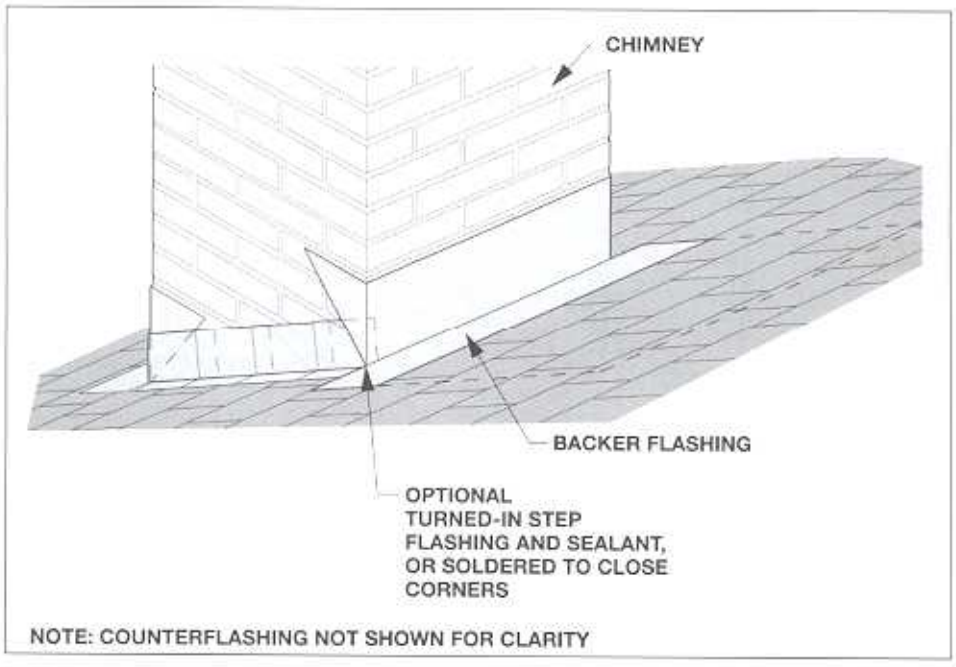

Figure 22: Example of sheet metal backer flashing at chimney

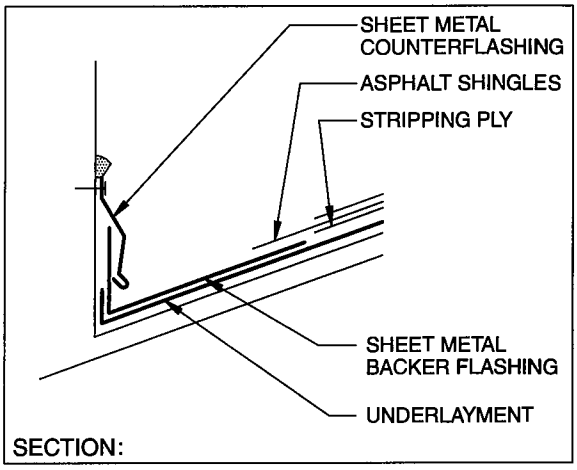

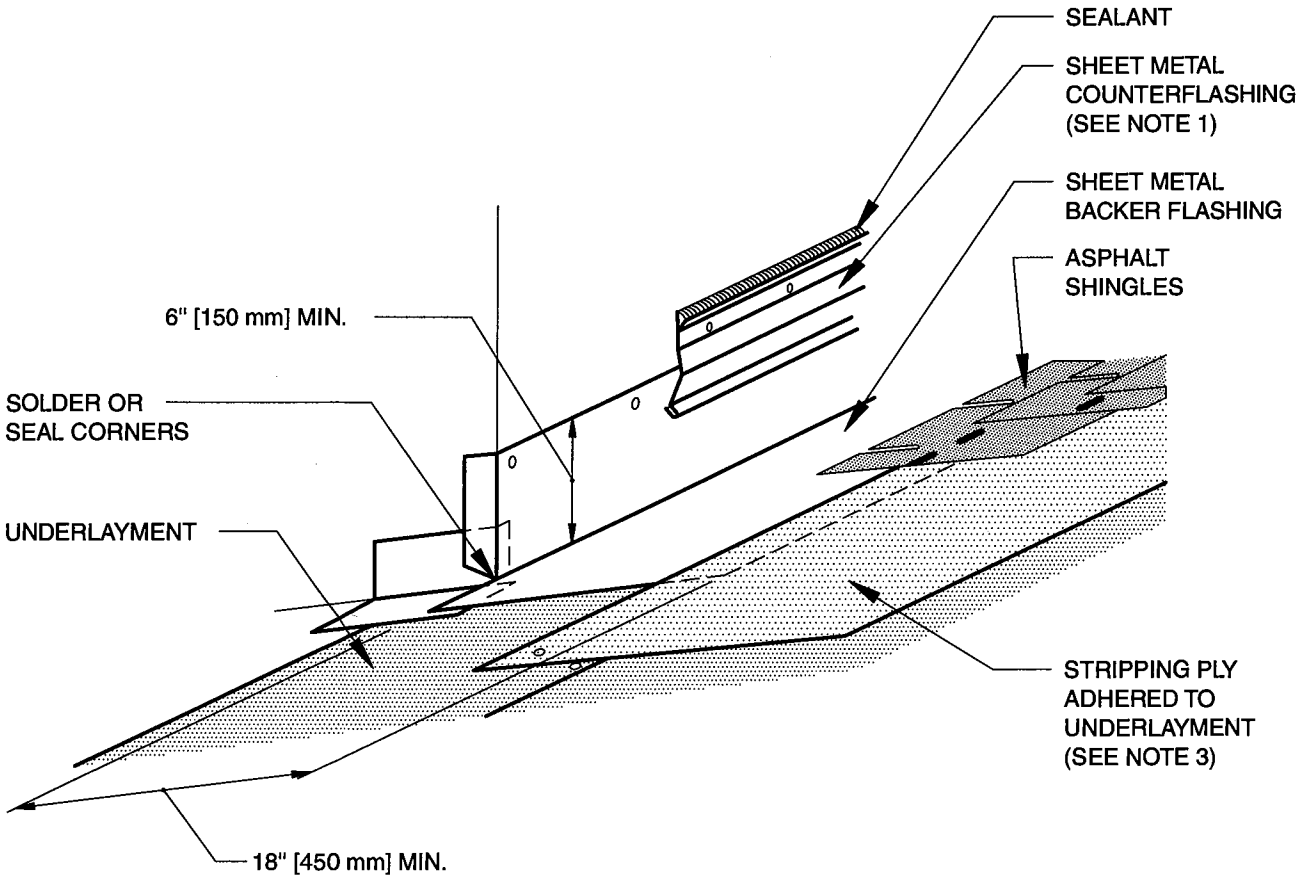

NOTES :

1. ALTERNATE COUNTERFLASHING PROFILES CAN BE USED.
2. IF STRIPPING PLY IS NOT USED, UNDERLAYMENT MUST BE EXTENDED OVER BACKER FLASHING.
3. CRICKETS SHOULD BE CONSIDERED IN LIEU OF BACKER FLASHINGS DEPENDING UPON WIDTH, SLOPE AND CLIMATIC CONDITIONS.

NATIONAL ROOFING CONTRACTORS ASSOCIATION

BACKER FLASHING

2001

NOT DRAWN TO SCALE

ASPH-3

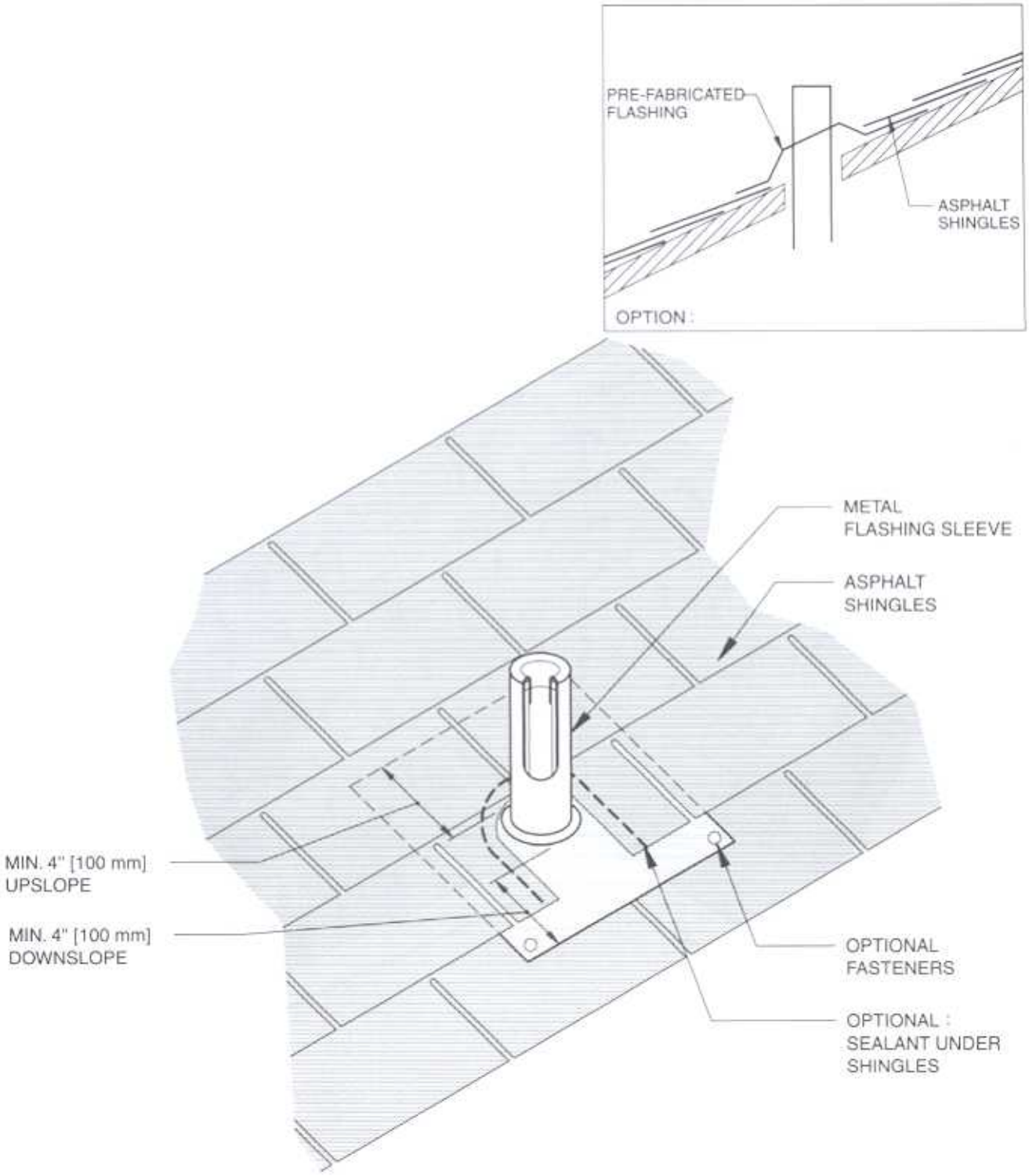

NATIONAL ROOFING CONTRACTORS ASSOCIATION

PIPE PENETRATION

2001

NOT DRAWN TO SCALE

ASPH-8